	new	cancelled		new	cancelled
A1	9,6+0,5; 0,8±0,05	9,5±0,05; 0,8±0,25			
A2	nD=1,487	nD=1,87			
A3	4,8; 9,5	3,2; 9,6			
A4	3/30	3/5			

Property of the PHOTONIS
Reproduction, or disclosure to third parties, in any form whatsoever
not allowed without written consent of the proprietors.

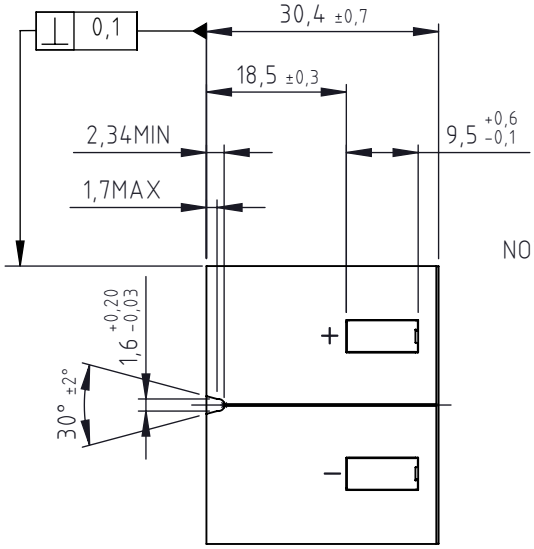

NOTE 1: GOLDPLATED CONTACTS MOUTED FLUSH TO, OR 0,13mm BELOW, SURFACE OF THE HOUSING.
2: + TERMINAL = +2,7V DC
− TERMINAL = −(GROUND)

VK

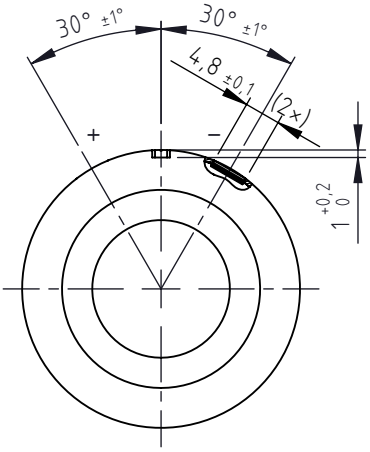

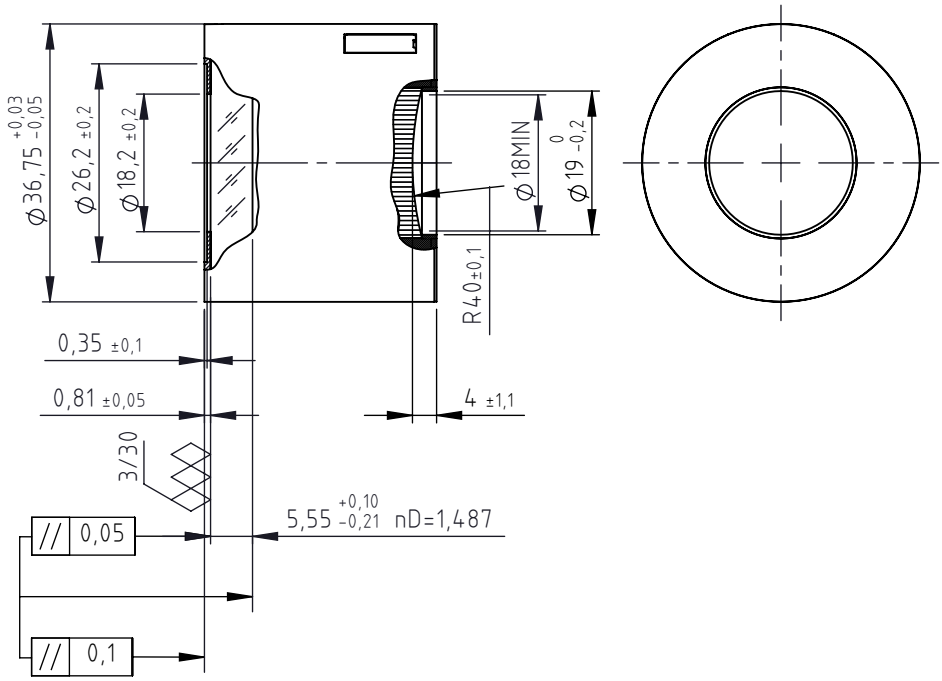

Eigendom van PHOTONIS
Vermenigvuldigen of mededeling aan derden, in welke vorm ook
is zonder schriftelijke toestemming van eigenares niet geoorloofd.

PHOTONIS ISO 9001 Certified	ISO 128	screw thread ISO 965	finish ISO 1302	material:	drawn:JK	A0	3-11-92
						A1	6-10-93
	A4	glass ISO 10110	geometr. tolerances ISO 1101	dimensions: mm	scale: 1 : 1	A2	16-9-98
						A3	24-3-06
IMAGE INTENSIFIER, 18mm, Twister, SA, R40					sheet 1 of 1	A4	6-11-07
					183-0124A4		TV