Raven 440 System

CONSOLE CABLE
HRAVEN-085 (115-0171-085) 10’

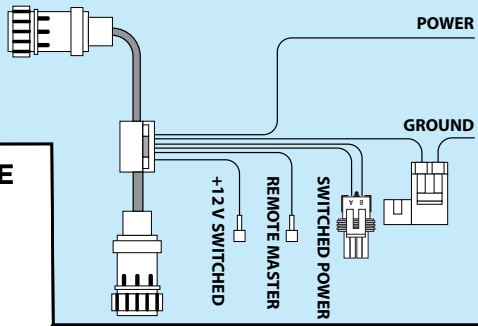

PRESSURE SENSOR CABLES
HRAVEN-153
(115-0171-153) 3’
HRAVEN-152
(115-0171-152) 10’

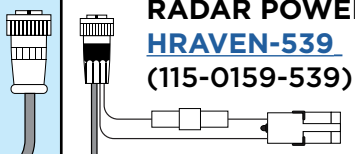

RADAR POWER CABLE
HRAVEN-539
(115-0159-539) 12’

PRESSURE SENSOR CABLES
HRAVEN-235
(115-0171-235) 6’
HRAVEN-151
(115-0171-151) 12’
HRAVEN-224
(115-0171-224) 37’

SPEED EXTENSION CABLES
HRAVEN-032
(115-0159-032) 12’
HRAVEN-018
(115-0159-018) 24’

SPEED SENSOR

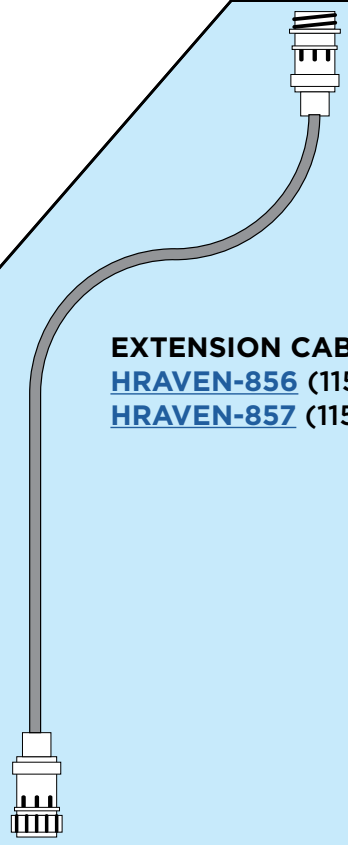

EXTENSION CABLES
HRAVEN-856 (115-0159-856) 12’
HRAVEN-857 (115-0159-857) 24’

FLOW CABLES
HRAVEN-800
(115-0171-800) 12’

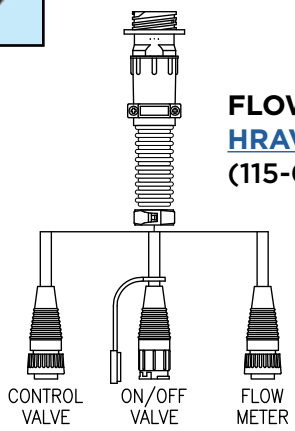

sensor-1.com
Agricultural Electronics 1-800-SENSOR-1