Parts Manual

ProCut 30 Series

3-Wheel Riding Mower

S/N: 1023 & Above

Models:	Description:
5901035	25HP Kohler (S/N: 1023 & Above) (H3225K)
5901036	27HP Kohler (H3227K)
5900228	72" Mower Deck (S/N: 1022 & Above) (P72)
5900227	61" Mower Deck (S/N: 1022 & Above) (P61)

Briggs and Stratton Yard Power Products Group
5375 North Main Street
Munnsville, NY 13409 USA
800-933-6175

5022211
Revision 07
Rev. Date: 01/2007
TP 400-7095-07-H3-F

MODEL COMPONENTS PAGE

Steering Group 4
Seat & Mount Group 6
Fuel Supply Hose & Tank Replacement Part Group 8
Fuel Tank & Mount Group 10
Instrument & Control Panel Group 12
Engine Accessories Group 14
Engine & PTO Group - Kohler 16
Pump Drive Group 18
Motion Control Group - Engine Deck 20
Motion Control Group - Trailer 22
Hydraulic Group 24
Parking Brake Group 28
Deck Lift Group 30
Tire & Wheel Group 32
Decal Group - Brand & Model 34
Decal Group - Safety & Operation 36
Oil Cooler Mount Group 38
Operator Presence Group 40
61" Mower Deck - Housing, Covers, Spindles & Blades 42
61" Mower Deck - Pulleys, Belt & Idler Arm 44
61" Mower Deck - Rollers & Casters 48
72" Mower Deck - Housing, Covers, Spindles & Blades 50
72" Mower Deck - Pulleys, Belt & Idler Arm 52
72" Mower Deck - Rollers & Casters 54
Electrical Schematics - Kohler (S/N: 11581 & below) 56-59
Electrical Schematics - Kohler (S/N: 11582 & above) 60-63
Torque Specification Chart ..... Inside Back Cover

Steering Group

NOTE: Unless noted otherwise, use the standard hardware torque specification chart.

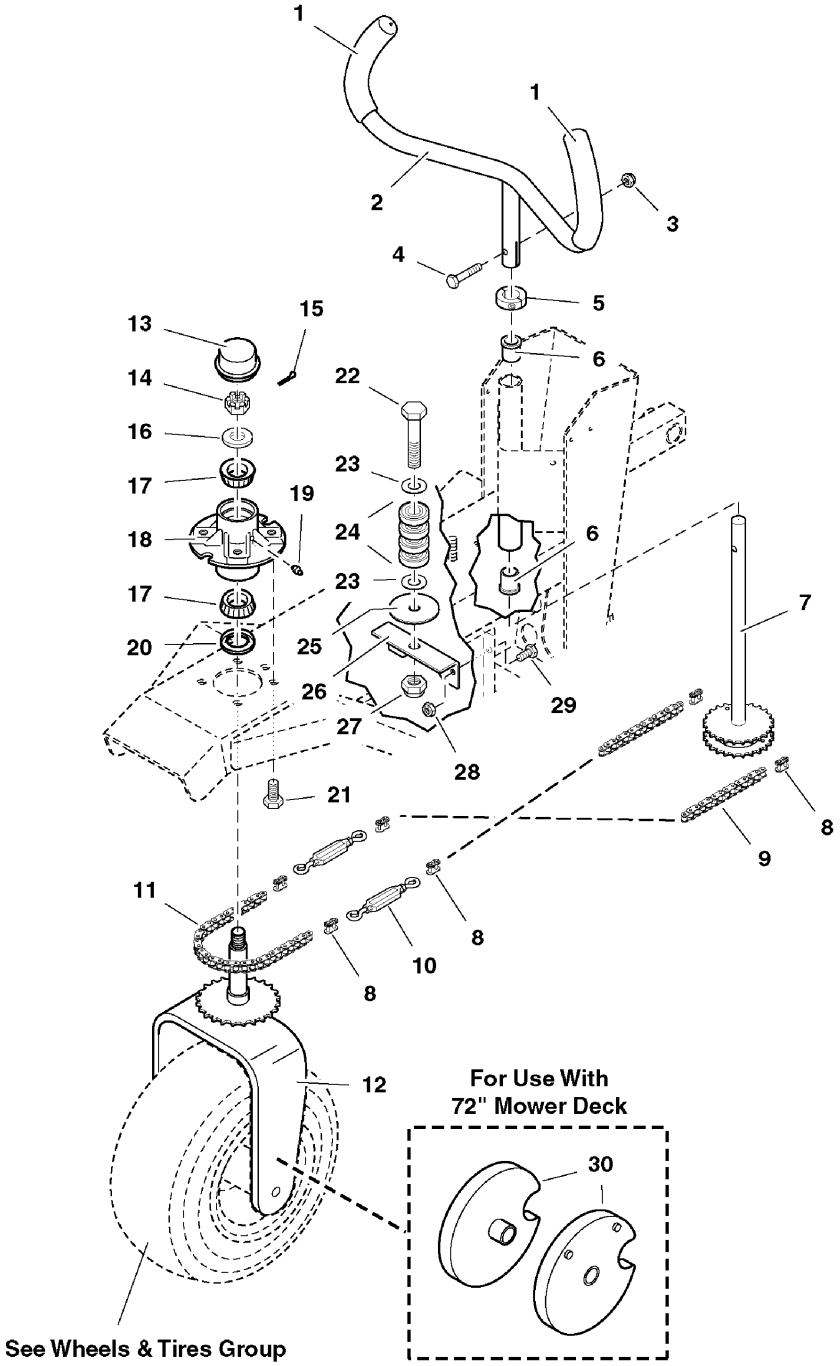

The above parts group applies to the following Mfg. Nos.:

5901035 (S/N: 1023 & Above) (H3225K)

5901036 (H3227K)

© Copyright 2007 Briggs and Stratton. All Rights Reserved.

Steering Group

REF NO.	PART NO.	QTY.	DESCRIPTION
1	5020837	2	GRIP, Foam
2	5041770B	1	STEERING HANDLE
3	5025096	1	NUT, 3/8-16 Hex Nylon Lock
4	5025013X12	1	BOLT, 3/8-16 x 1-1/2
5	5020602	1	COLLAR, 1" Split
6	5020823	2	BUSHING, Flange
7	5042087	1	SHAFT, Steering Sprocket
8	5010674	6	CONNECTOR, #40 Chain Link
9	5010673X31	2	CHAIN, #40 Roller, 31 Links
10	5042090	2	TURNBUCKLE
11	5010673X35	1	CHAIN, #40 Roller, 35 Links
12	5042127B	1	MOUNT, Steering Tire
13	5021073	1	CAP
14	5025104	1	NUT, 3/4-16 Hex Slotted
15	5025203X10	1	COTTER PIN, 1/8" X 1-1/4"
16	5025160	1	WASHER, 3/4" SAE
17	5020884	2	BEARING, Tapered Roller
18	5042110	1	HUB, Steering
19	5020095	1	GREASE FITTING
20	5021072	1	GREASE SEAL
21	5025018X10	4	BOLT, 1/2-20 x 1-1/4
22	5025280X24	1	BOLT, 5/8-11 x 3
23	5025281	2	WASHER, 5/8" SAE
24	5021882	4	BEARING, Roller
25	5043652	1	WASHER, Chain
26	5044627B	1	MOUNT, Chain Roller
27	5025282	1	NUT, 5/8-11 Hex Jam Nylon Lock
28	5025057	2	NUT, 5/16-18 Hex Nylon Lock
29	5025011X6	2	BOLT, 5/16-18 x 3/4
30	5044372B	2	WHEEL WEIGHT (72" Deck only)

Footnotes

The above parts group applies to the following Mfg. Nos.:
5901035 (S/N: 1023 & Above) (H3225K)
5901036 (H3227K)

© Copyright 2007 Briggs and Stratton. All Rights Reserved.

Seat & Mount Group

NOTE: Unless noted otherwise, use the standard hardware torque specification chart.

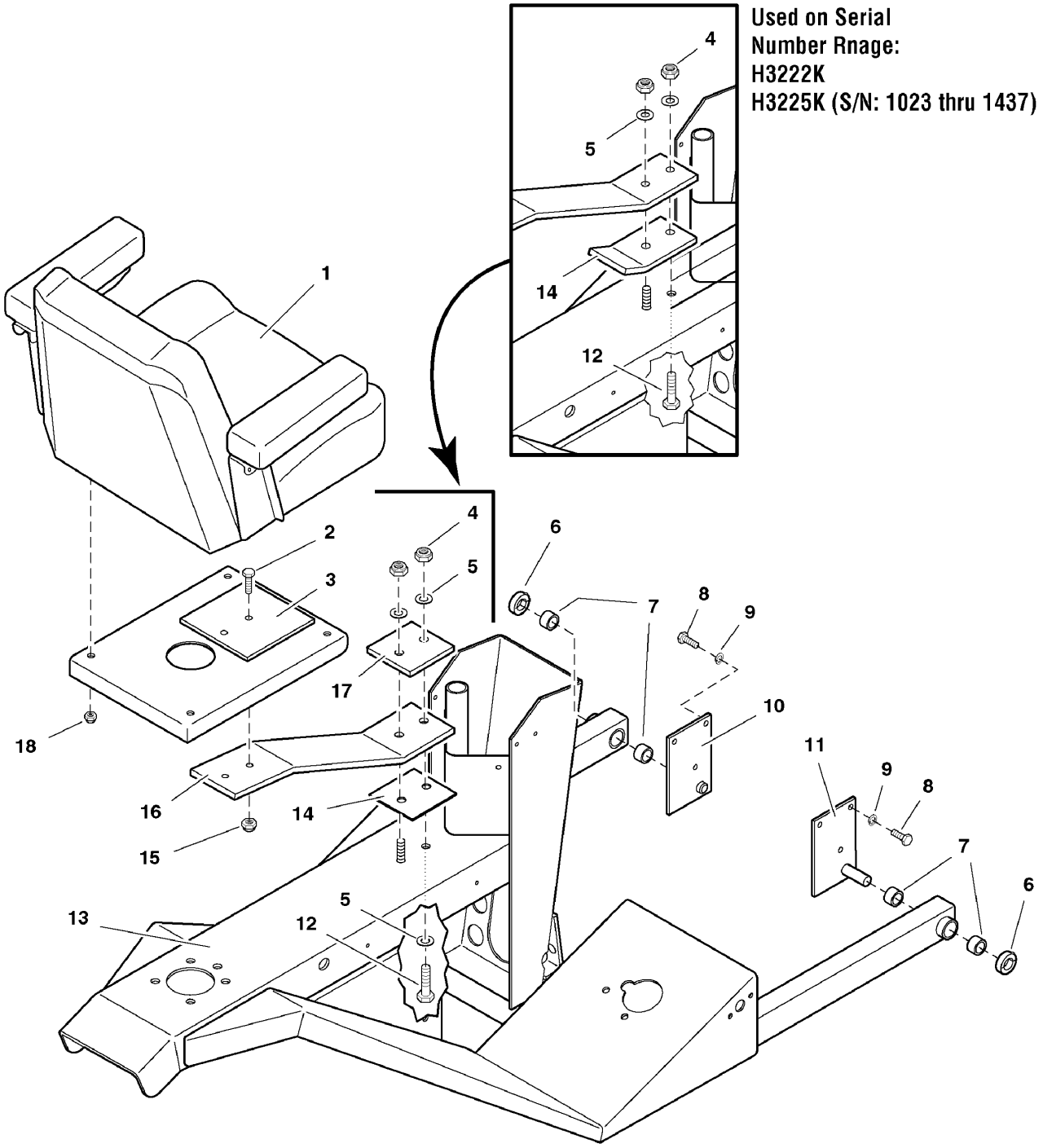

The above parts group applies to the following Mfg. Nos.:

5901035 (S/N: 1023 & Above) (H3225K)

5901036 (H3227K)

© Copyright 2007 Briggs and Stratton. All Rights Reserved.

Seat & Mount Group

REF NO.	PART NO.	QTY.	DESCRIPTION
1	5022031	1	SEAT, Gray, Complete
1	5022031X2	1	CUSHION, Bottom, Gray
1	5022031X4	1	CUSHION, Back, Gray
1	5022185	2	ARM REST
1	5020930X3	1	SEAT ADJUSTER RAILS (set of 2)
2	5025013X10	2	BOLT, 3/8-16 x 1-1/4
3	5045574B	1	PLATE, Seat Mount
4	5025094	2	NUT, 7/16-20 Hex Nylon Lock
5	5025157	2	WASHER, 7/16" SAE (H3225K, S/N: 1023 - 1437)
5	5025381	3	WASHER, 7/16" GD9 (H3225K, S/N: 1462 & above)
6	5010477	2	COLLAR, 5/8" Set
7	5020876P	4	BUSHING, Plastic
8	5025011X8	6	BOLT, 5/16-18 x 1
9	5025170	6	WASHER, 5/16" Lock
10	5045570B	1	PIVOT BRACKET-LH
11	5045571B	1	PIVOT BRACKET-RH
12	25291-14	1	BOLT, 7/16-20 x 1-3/4 (H2335K, S/N: 1023 - 1437)
12	5025380	1	BOLT, 7/16-20 x 2 (H3225K, S/N: 1438 & above)
13	5031113B	1	TRAILER FRAME
14	-	1	SUPPORT, Seat Spring (OBSOLETE, see S/N: 1438 & above for replacement parts.)
14	5048224A	1	SHIM, Seat Spring, Lower
15	5025096	2	NUT, 3/8-16 Hex Nylon Lock
16	-	1	SEAT SPRING (OBSOLETE, see S/N: 1438 & above for replacement parts.)
16	5048222A	1	SEAT SPRING
17	5048223A	1	SHIM, Seat Spring, Upper
18	5025057	4	NUT, 5/16-18 Hex Nylon Lock
19	5100652	1	SPRING, EXTENSION, 4" SEAT ADJUSTMENT (Not shown.)

Footnotes

The above parts group applies to the following Mfg. Nos.:
5901035 (S/N: 1023 & Above) (H3225K)
5901036 (H3227K)

© Copyright 2007 Briggs and Stratton. All Rights Reserved.

Fuel Supply Hose & Tank Replacement Part Group

NOTE: Unless noted otherwise, use the standard hardware torque specification chart.

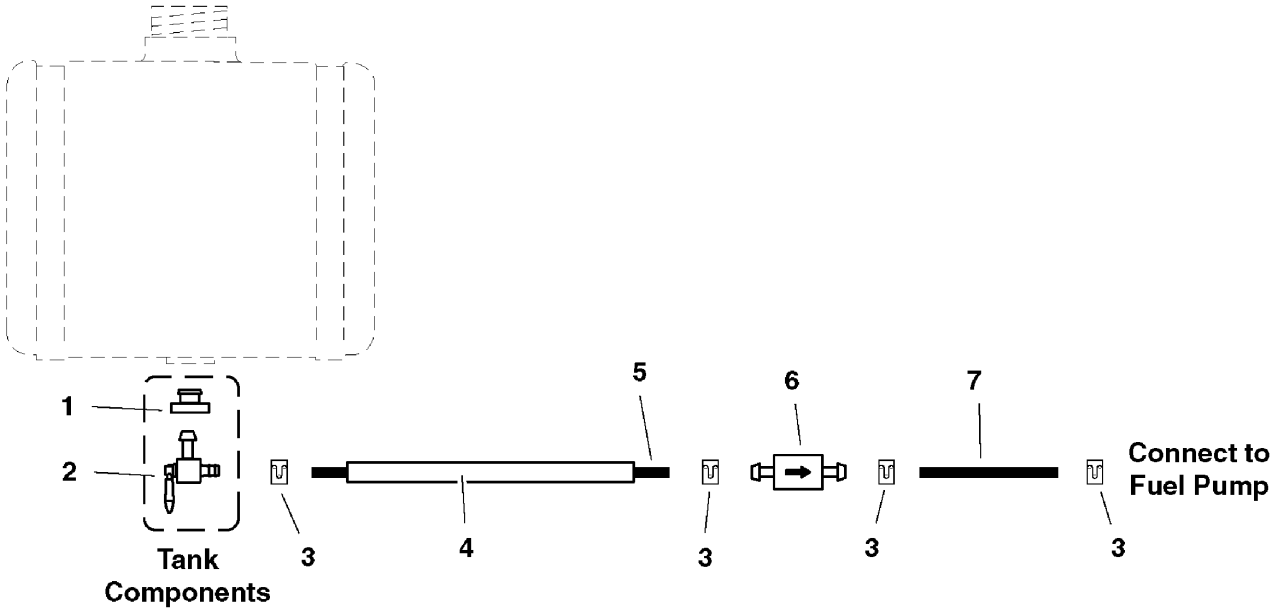

The above parts group applies to the following Mfg. Nos.:

5901035 (S/N: 1023 & Above) (H3225K)

5901036 (H3227K)

© Copyright 2007 Briggs and Stratton. All Rights Reserved.

Fuel Supply Hose & Tank Replacement Part Group

REF NO.	PART NO.	QTY.	DESCRIPTION
1	5022151	1	RUBBER BUSHING
2	5022152	1	FUEL SHUTOFF VALVE
3	5020835	4	CLAMP, Hose
4	5050833X35	1	WIRE LOOM, 35"
5	50831-37	1	1/4" Fuel Line, 37" Long
6	5021178X3	1	FUEL FILTER
7	5050831X9	1	1/4" Fuel Line, 9" Long

Footnotes

The above parts group applies to the following Mfg. Nos.:
5901035 (S/N: 1023 & Above) (H3225K)
5901036 (H3227K)

© Copyright 2007 Briggs and Stratton. All Rights Reserved.

Fuel Tank & Mount Group

NOTE: Unless noted otherwise, use the standard hardware torque specification chart.

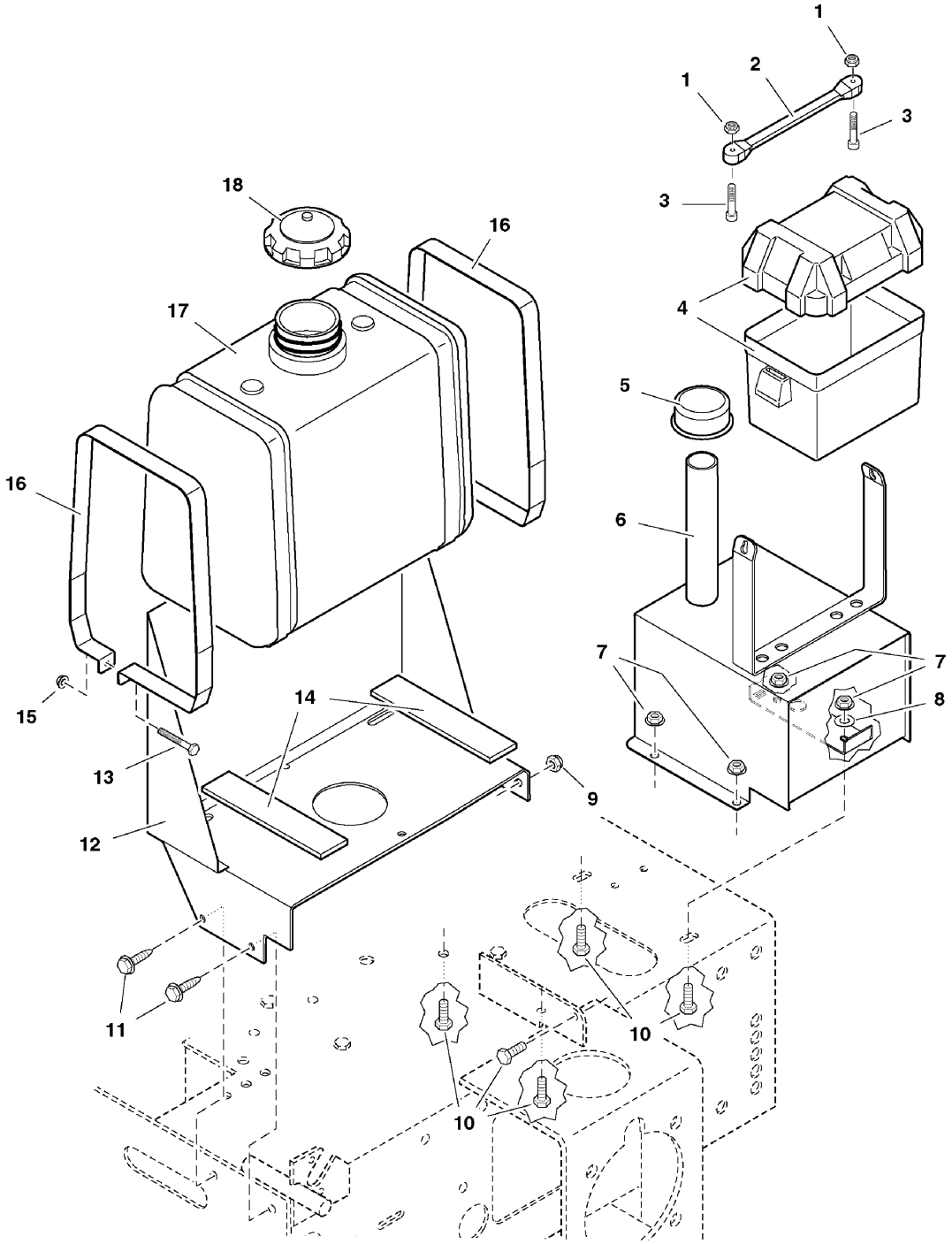

The above parts group applies to the following Mfg. Nos.:

5901035 (S/N: 1023 & Above) (H3225K)

5901036 (H3227K)

© Copyright 2007 Briggs and Stratton. All Rights Reserved.

Fuel Tank & Mount Group

REF NO.	PART NO.	QTY.	DESCRIPTION
1	5025271	2	NUT, #10-24 Hex Nylon Lock
2	5021670	1	RUBBER STRAP
3	5025270	2	SCREW, #10-24 x 1
4	5046188	1	BATTERY BOX
5	5021871	1	BREATHER
6	5030789	1	HYDRO TANK ASSEMBLY, Complete
6	5030774B	1	HYDRO TANK
6	21125-7	3	FOIL TAPE
7	5025127	5	NUT, 5/16-18 Hex Small Serrated Flange
8	5025155	1	WASHER, 5/16" SAE
9	5025057	1	NUT, 5/16-18 Hex Nylon Lock
10	5025011X6	5	BOLT, 5/16-18 x 3/4
11	5025059X6	2	BOLT, Self Tapping, 5/16-18 x 3/4
12	5044692B	1	FUEL TANK MOUNT
13	5025010X12	2	BOLT, 1/4-20 X 1-1/2
14	5021877	2	RUBBER PAD
15	5025126	2	NUT, 1/4-20 Hex Serrated Flange
16	5044693B	2	FUEL TANK STRAP
17	5021868	1	FUEL TANK, 6 Gallon
18	5022158	1	FUEL TANK CAP

Footnotes

The above parts group applies to the following Mfg. Nos.:
5901035 (S/N: 1023 & Above) (H3225K)
5901036 (H3227K)

© Copyright 2007 Briggs and Stratton. All Rights Reserved.

Instrument & Control Panel Group

NOTE: Unless noted otherwise, use the standard hardware torque specification chart.

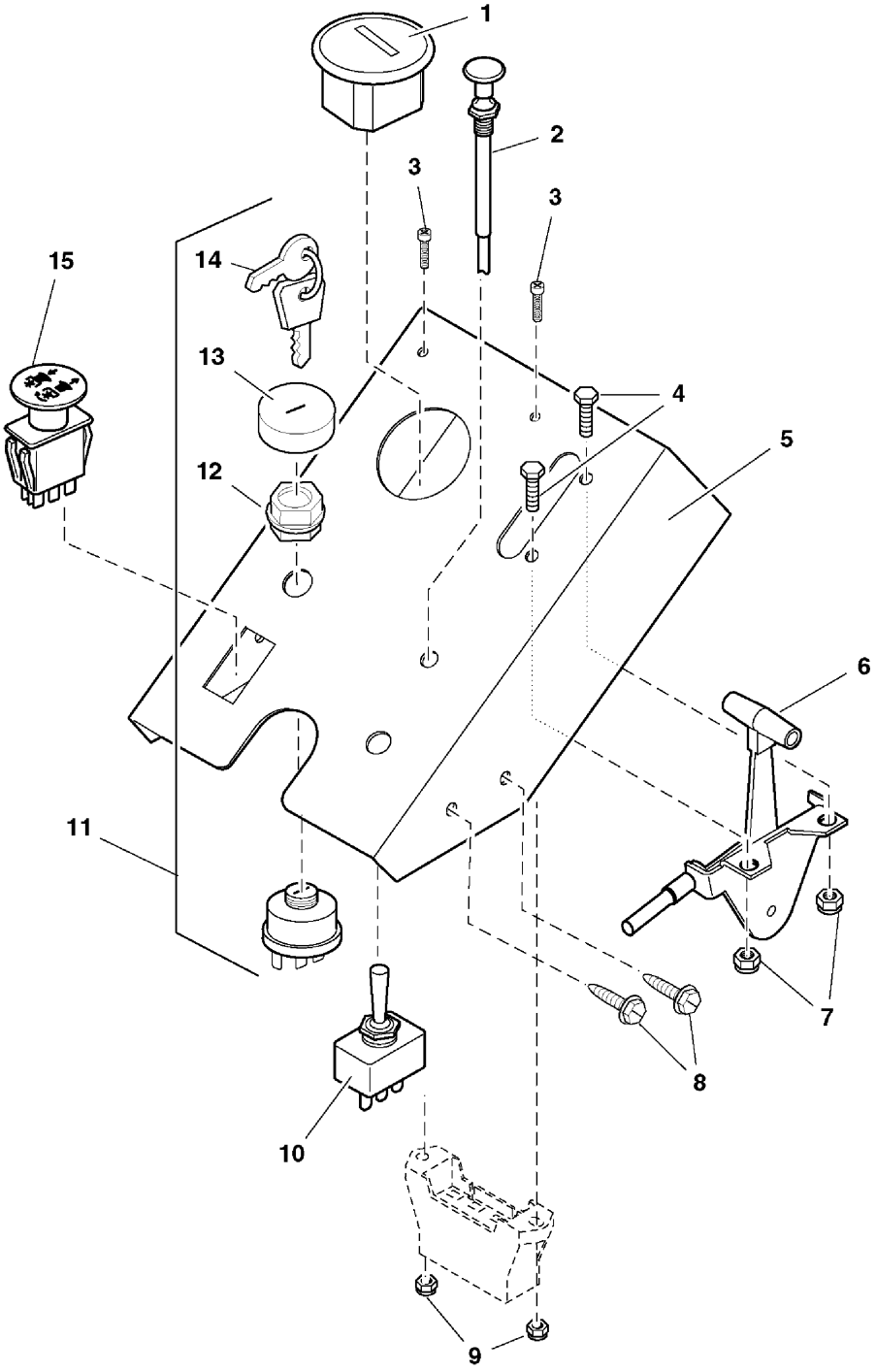

The above parts group applies to the following Mfg. Nos.:

5901035 (S/N: 1023 & Above) (H3225K)

5901036 (H3227K)

© Copyright 2007 Briggs and Stratton. All Rights Reserved.

Instrument & Control Panel Group

REF NO.	PART NO.	QTY.	DESCRIPTION
1	5020060	1	HOUR METER
2	5021663	1	CABLE, Choke Control, 57"
3	5025270	2	SCREW, #10-24 x 1
4	5025010X6	2	BOLT, 1/4-20 x 3/4
5	5045193B	1	DASH PANEL
6	5021662	1	CABLE, Throttle, 54"
7	5025095	2	NUT, 1/4-20 Hex Nylon Lock
8	5025279X6	4	BOLT, Self-Tapping, 1/4-20 x 3/4
9	5025271	2	NUT, #10-24 Hex Nylon Lock
10	5021734	1	SWITCH, Actuator
11	5020927	1	SWITCH, Ignition, Complete (Includes Ref No. 12 - 14)
12	5022791	1	PLASTIC NUT
13	5022790	1	COVER
14	5022789	1	KEY, Ignition, Molded Set
15	5022180	1	SWITCH, PTO

Footnotes

The above parts group applies to the following Mfg. Nos.:
5901035 (S/N: 1023 & Above) (H3225K)
5901036 (H3227K)

© Copyright 2007 Briggs and Stratton. All Rights Reserved.

NOTE: Unless noted otherwise, use the standard hardware torque specification chart.

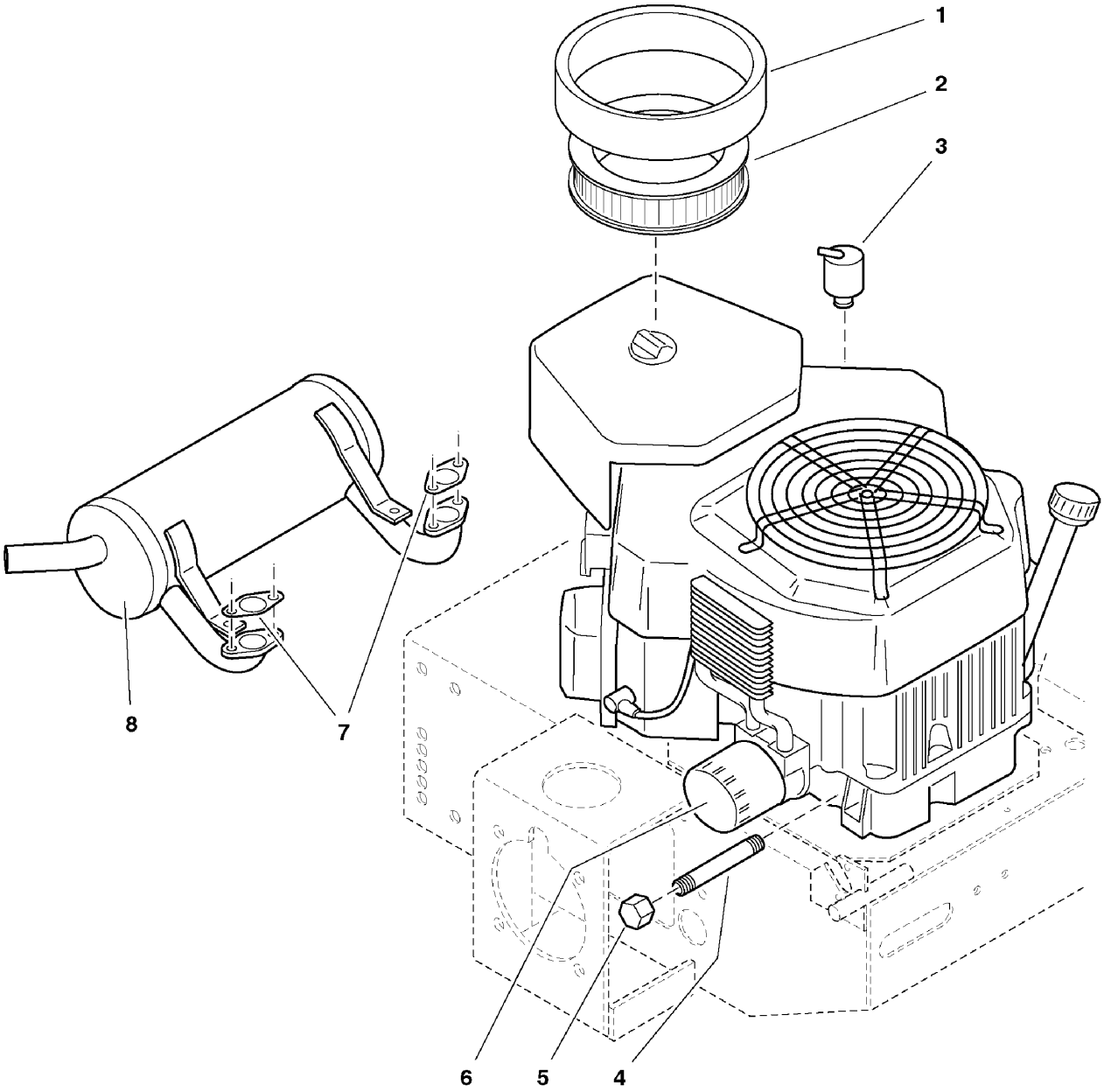

The above parts group applies to the following Mfg. Nos.:

5901035 (S/N: 1023 & Above) (H3225K)
5901036 (H3227K)

© Copyright 2007 Briggs and Stratton. All Rights Reserved.

Engine Accessories Group

REF NO.	PART NO.	QTY.	DESCRIPTION
1	5020922X4	1	PRE-CLEANER (45 083 01)
2	5020922X2	1	AIR FILTER (45 083 02)
3	-	1	BREATHER (24 755 20)
4	5021707	1	NIPPLE, 3/8 NPT X 4-1/2
5	5021466	1	CAP, 3/8 NPT
6	5021144X1	1	OIL FILTER (12 050 01)
7	-	2	GASKET (24 041 02)
8	5022161	1	MUFFLER, Kohler

Footnotes

- See your local Kohler engine dealer for service parts.

The above parts group applies to the following Mfg. Nos.:
5901035 (S/N: 1023 & Above) (H3225K)
5901036 (H3227K)

© Copyright 2007 Briggs and Stratton. All Rights Reserved.

NOTE: Unless noted otherwise, use the standard hardware torque specification chart.

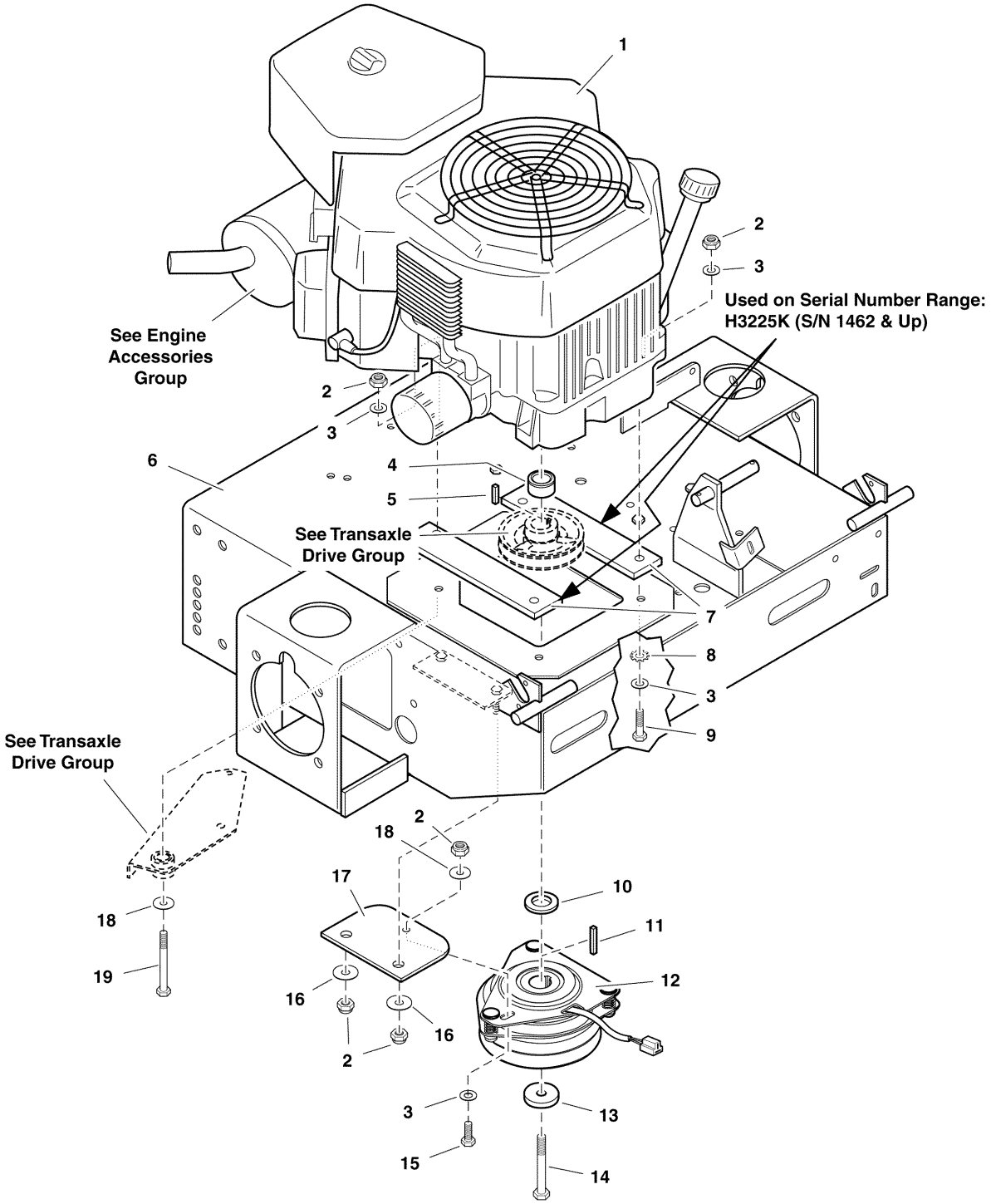

The above parts group applies to the following Mfg. Nos.:

5901035 (S/N: 1023 & Above) (H3225K)

5901036 (H3227K)

© Copyright 2007 Briggs and Stratton. All Rights Reserved.

Engine & PTO Group - Kohler

REF NO.	PART NO.	QTY.	DESCRIPTION
1	5022961	1	ENGINE, 25HP Kohler (Model CV730S) (H3225K S/N: 1462 & above)
1	5022034	1	ENGINE, 22HP Kohler (Model CV22S) (H3225K, S/N: 1023 - 1461)
1	5022069	1	ENGINE, 25HP Kohler (Model CV25S) (H3225K, S/N: 1023 - 1461)
1	5023235	1	ENGINE, 27HP Kohler (Model CV740V)
2	5025057	7	NUT, 5/16-18 Hex Nylon Lock
3	5025155	9	WASHER, 5/16" SAE
4	5042840	1	SPACER, 1.13 X 1.75 X .88 (H3225K, S/N: 1462 & above)
4	5044062	1	SPACER, 1.13 X 1.75 X .50 (H3225K, S/N: 1023 - 1461)
5	5050407X10	1	KEY, 1/4 SQ. X 5/8
6	5031130B	1	ENGINE DECK (H3225K, S/N: 1023 & Above)
7	5045352B	2	SPACER, Engine Block (H3225K, S/N: 1462 & above)
8	5025188	3	WASHER, 5/16" Internal Tooth Lock
9	5025011X14	3	BOLT, 5/16-18 x 1-3/4 (H3225K, S/N: 1462 & above)
9	5025011X10	3	BOLT, 5/16-18 x 1-1/4 (H3225K, S/N: 1023 - 1461)
10	5048135	1	SPACER, 1.13 x 1.75 x .62 (H3225K, S/N: 1462 & above)
10	5042945	1	SPACER, 1.13 x 2.00 x .19 (H3225K, S/N: 1023 - 1461)
11	5050407X1	1	KEY, 1/4 SQ. X 1
12	5021145	1	CLUTCH, Electric, 1-1/8" Shaft
13	5042132	1	SPACER, .45 x 1.62 x .37
14	5045289	1	CRANKSHAFT BOLT, 7/16 x 2-1/2 (H3225K, S/N: 1462 & above)
14	5043626	1	CRANKSHAFT BOLT, 7/16 x 3 (H3225K, S/N: 1023 - 1461)
15	5025011X6	1	BOLT, 5/16-18 x 3/4
16	5044617	2	WASHER, Clutch Anchor
17	5043636	1	CLUTCH ANCHOR PAD
18	5025164	2	WASHER, 5/16" Fender
19	25011-28	1	BOLT, 5/16-18 x 3-1/2 (H3225K, S/N: 1462 & above)
19	5025011X24	1	BOLT, 5/16-18 x 3 (H3225K, S/N: 1023 - 1461)

Footnotes

- See your local Kohler engine dealer for parts & service.

The above parts group applies to the following Mfg. Nos.:

5901035 (S/N: 1023 & Above) (H3225K)
5901036 (H3227K)

© Copyright 2007 Briggs and Stratton. All Rights Reserved.

Pump Drive Group

NOTE: Unless noted otherwise, use the standard hardware torque specification chart.

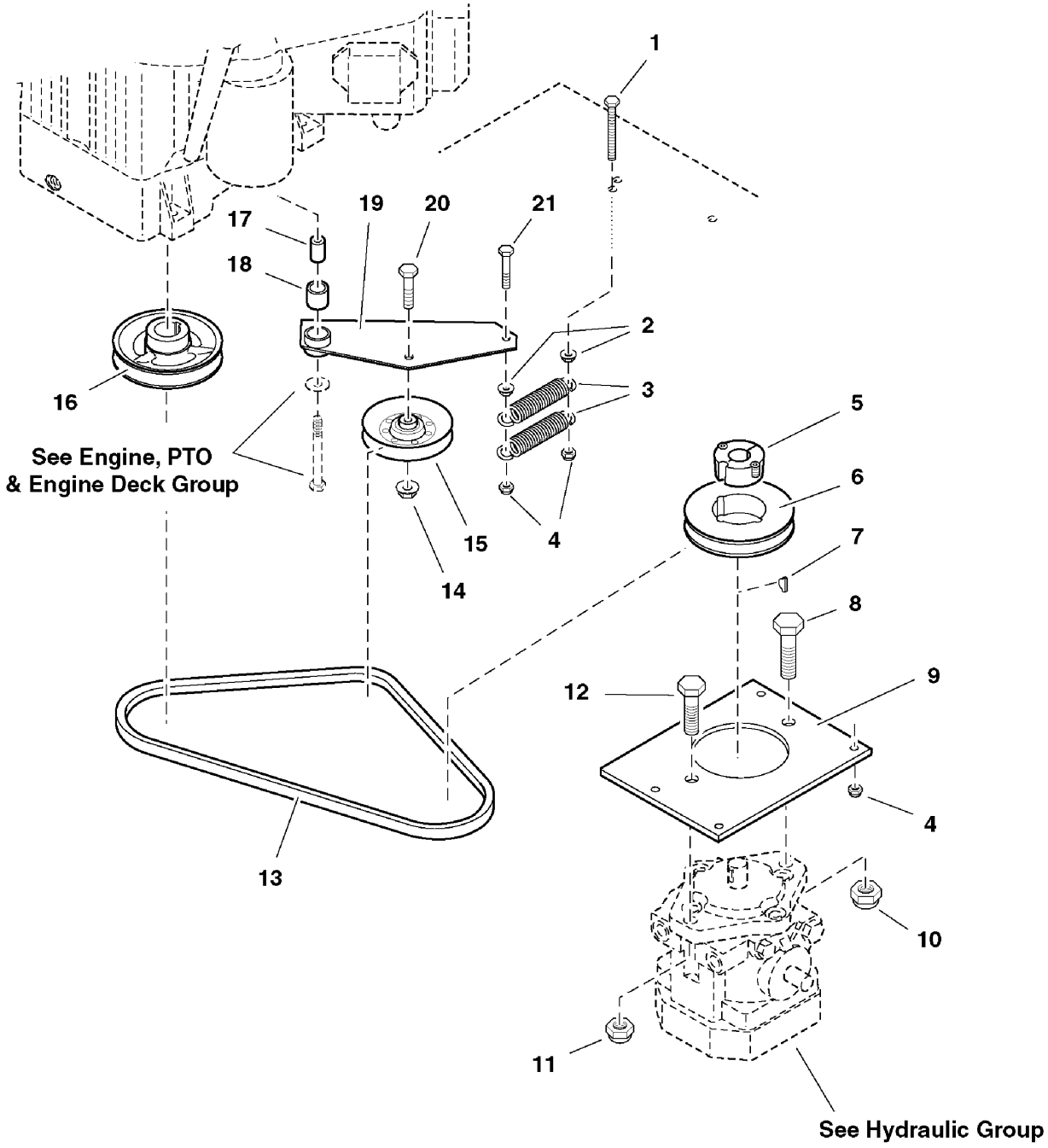

The above parts group applies to the following Mfg. Nos.:

5901035 (S/N: 1023 & Above) (H3225K)

5901036 (H3227K)

© Copyright 2007 Briggs and Stratton. All Rights Reserved.

Pump Drive Group

REF NO.	PART NO.	QTY.	DESCRIPTION
1	5025055X28	1	BOLT, 5/16-18 x 3-1/2 TFL
2	5025127	2	NUT, 5/16-18 Hex Small Serrated Flange
3	5020807	2	SPRING, Extension
4	5025057	6	NUT, 5/16-18 Hex Nylon Lock
5	5021367	1	BUSHING, Tapered Hub
6	5021681	1	PULLEY, Tapered Hub
7	5021084	1	KEY, #61 Woodruff
8	5025018X14	1	BOLT, 1/2-20 x 1-3/4
9	5044024B	1	PLATE, Pump Mount
10	5025098	1	NUT, 1/2-20 Hex Nylon Lock
11	5025125	1	NUT, 7/16-14 Hex Nylon Lock
12	25015-12	1	BOLT, 7/16-14 x 1-1/2
13	5021684	1	BELT
14	5025128	1	NUT, 3/8-16 Hex Serrated Flange
15	5044060	1	PULLEY, Idler
16	5044061	1	PULLEY, Pump Drive
17	5042134	1	SPACER, .32 x .75 x 1.06
18	5020876B	1	BUSHING, Brass
19	5044032B	1	IDLER ARM ASSEMBLY, Complete (Includes Ref No. 18)
20	5025013X14	1	BOLT, 3/8-16 x 1-3/4
21	5025011X14	1	BOLT, 5/16-18 x 1-3/4

Footnotes

The above parts group applies to the following Mfg. Nos.:
5901035 (S/N: 1023 & Above) (H3225K)
5901036 (H3227K)

© Copyright 2007 Briggs and Stratton. All Rights Reserved.

Motion Control Group - Engine Deck

NOTE: Unless noted otherwise, use the standard hardware torque specification chart.

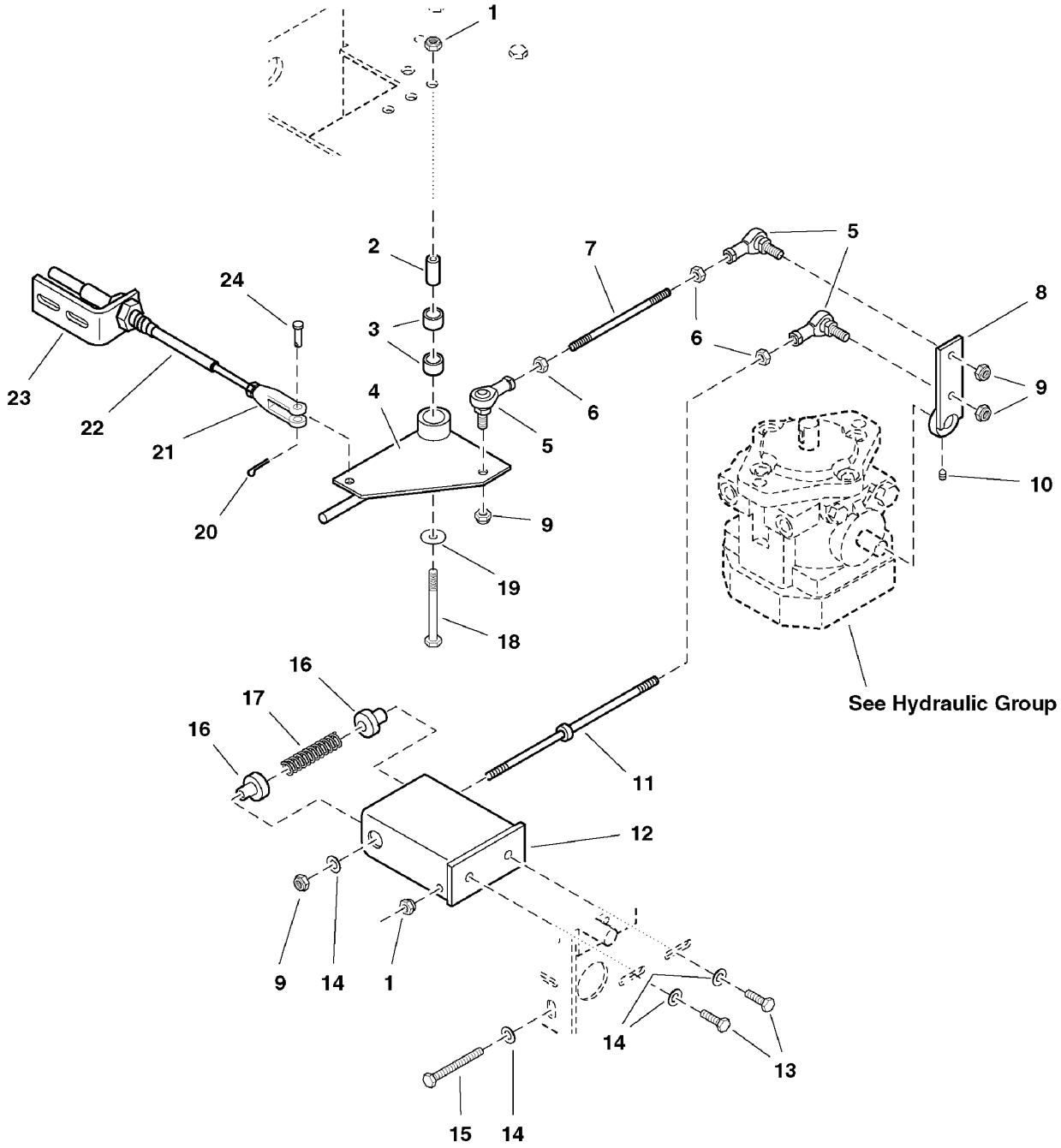

The above parts group applies to the following Mfg. Nos.:

5901035 (S/N: 1023 & Above) (H3225K)

5901036 (H3227K)

© Copyright 2007 Briggs and Stratton. All Rights Reserved.

Motion Control Group - Engine Deck

REF NO.	PART NO.	QTY.	DESCRIPTION
1	5025057	2	NUT, 5/16-18 Hex Nylon Lock
2	5042926	1	SPACER, .33 X .75 X 1.56
3	5020043	2	BUSHING, Brass
4	5044068B	1	SPEED CONTROL PIVOT, Complete (Includes Ref No. 3)
5	5021170	3	BALL JOINT, 5/16-24 Female Studded
6	5025033	3	NUT, 5/16-24 Hex
7	5044083	1	CONTROL ROD
8	5044049B	1	LEVER, Pump Control
9	5025045	4	NUT, 5/16-24, Hex Nylon Lock
10	25272-4	1	SET SCREW, 5/16-18 x 1/2, Cone
11	5042934	1	SPRING RETURN ROD
12	5044055B	1	BOX, Spring Mount
13	5025011X8	2	BOLT, 5/16-18 x 1
14	5025155	4	WASHER, 5/16" SAE
15	5025055X28	1	BOLT, 5/16-18 x 3-1/2 TFL
16	5042911	2	GUIDE, Spring Return
17	5021354	1	SPRING, Compression
18	5025011X18	1	BOLT, 5/16-18 x 2-1/4
19	5025164	1	WASHER, 5/16" Fender
20	25204-4	1	COTTER PIN, 1/16" x 1/2"
21	5021104	1	CLEVIS, 1/4-28, Plastic
22	5021089	1	CABLE, Speed Control
23	5042170B	1	CABLE BRACKET
24	5025212X8	1	CLEVIS PIN, 1/4 x 1

Footnotes

The above parts group applies to the following Mfg. Nos.:
5901035 (S/N: 1023 & Above) (H3225K)
5901036 (H3227K)

© Copyright 2007 Briggs and Stratton. All Rights Reserved.

Motion Control Group - Trailer

NOTE: Unless noted otherwise, use the standard hardware torque specification chart.

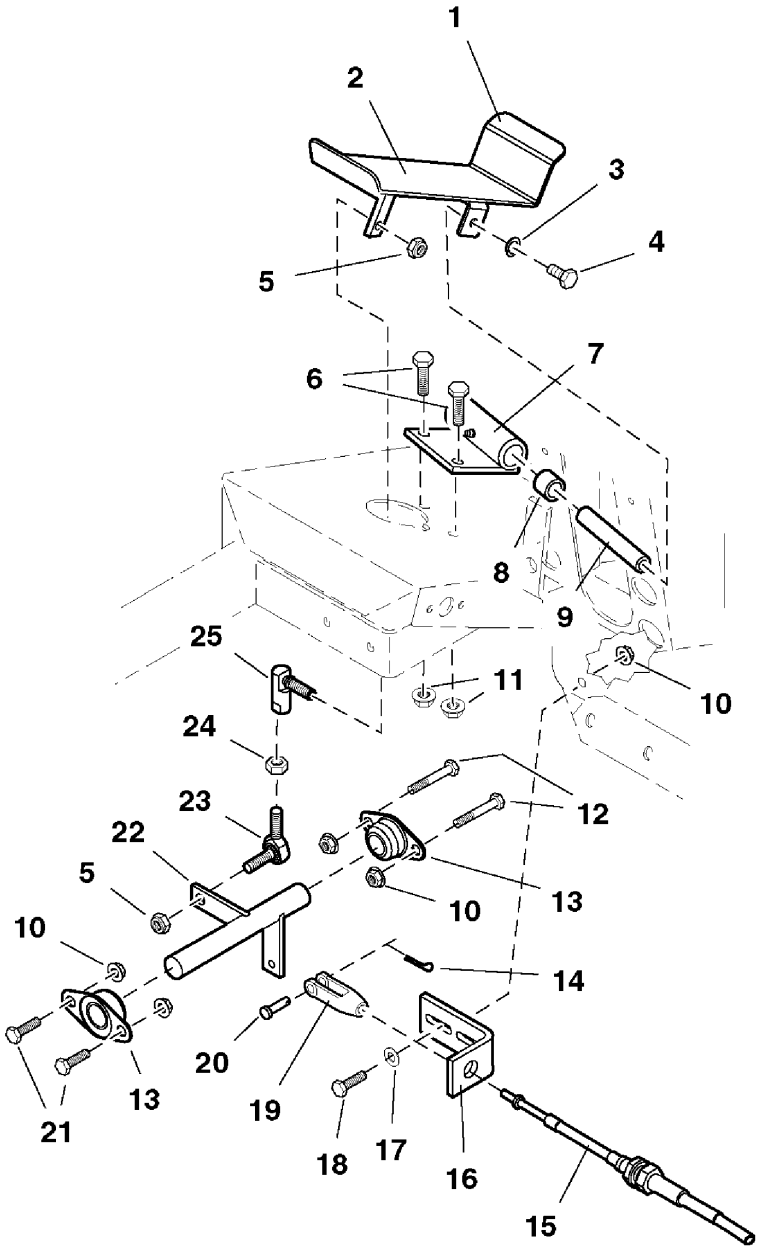

The above parts group applies to the following Mfg. Nos.:

5901035 (S/N: 1023 & Above) (H3225K)

5901036 (H3227K)

© Copyright 2007 Briggs and Stratton. All Rights Reserved.

Motion Control Group - Trailer

REF NO.	PART NO.	QTY.	DESCRIPTION
1	5042185B	1	FOOT CONTROL PEDAL
2	5042281	1	SAFETY WALK
3	5025171	2	WASHER, 3/8" Lock
4	5025013X6	2	BOLT, 3/8-16 x 3/4
5	5025097	2	NUT, 3/8-24 Hex Nylon Lock
6	5025013X8	2	BOLT, 3/8-16 x 1
7	5042137B	1	FOOT PEDAL PIVOT MOUNT, Complete
8	5020875P	2	BUSHING, Plastic
9	5042147	1	SHAFT, Pedal Pivot
10	5025139	6	NUT, 5/16-18 Hex Large Serrated Flange
11	5025128	2	NUT, 3/8-16 Hex Serrated Flange
12	5025011X20	2	BOLT, 5/16-18 x 2-1/2
13	5021098	2	BEARING, Flange
14	25204-4	1	COTTER PIN, 1/16" x 1/2"
15	5021089	1	CABLE, Speed Control
16	5042170B	1	CABLE BRACKET
17	5025155	2	WASHER, 5/16" SAE
18	5025011X8	2	BOLT, 5/16-18 x 1
19	5021104	1	CLEVIS, 1/4-28, Plastic
20	5025212X8	1	CLEVIS PIN, 1/4 x 1
21	5025011X6	2	BOLT, 5/16-18 x 3/4
22	5042184B	1	BELL CRANK
23	5021049	1	BALL JOINT, 3/8-24 Male, Studded
24	5025035	1	NUT, 3/8-24 Hex
25	5020805	1	BALL JOINT, 3/8" Female Studded

Footnotes

The above parts group applies to the following Mfg. Nos.:
5901035 (S/N: 1023 & Above) (H3225K)
5901036 (H3227K)

© Copyright 2007 Briggs and Stratton. All Rights Reserved.

Hydraulic Group

NOTE: Unless noted otherwise, use the standard hardware torque specification chart.

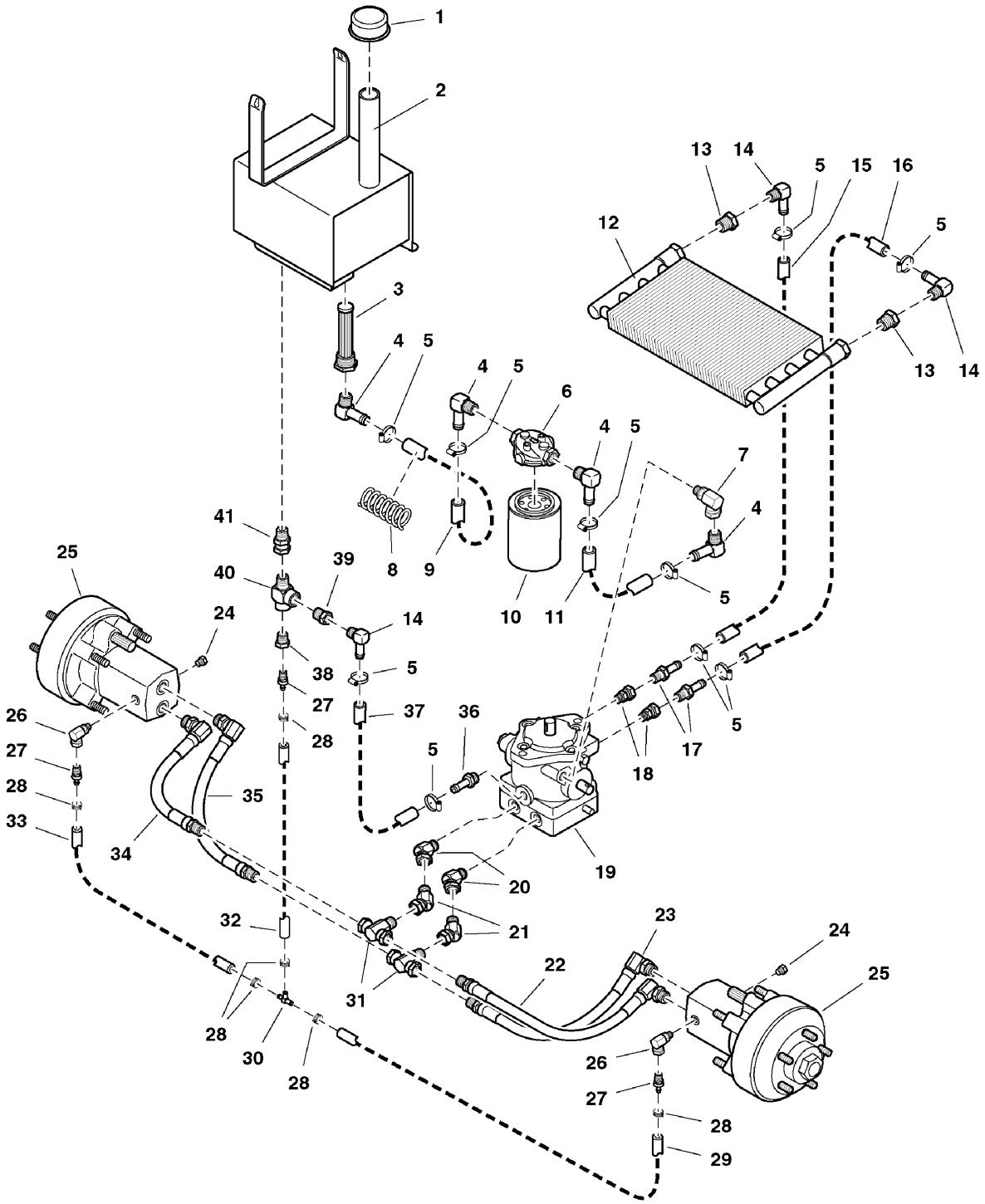

The above parts group applies to the following Mfg. Nos.:

5901035 (S/N: 1023 & Above) (H3225K)

5901036 (H3227K)

© Copyright 2007 Briggs and Stratton. All Rights Reserved.

Hydraulic Group

REF NO.	PART NO.	QTY.	DESCRIPTION
1	5021871	1	BREATHER
2	5030789	1	HYDRO TANK ASSEMBLY, Complete
2	5030774B	1	HYDRO TANK
2	21125-7	3	FOIL TAPE
3	5021082	1	STRAINER
4	5021233	4	FITTING, 1/2" NPT, 90 Deg.
5	5021392	10	CLAMP, #6 Hose
6	5021356	1	FILTER HEAD
7	5021363	1	FITTING, O-Ring, 90 Deg.
8	5022845	1	SPRING, Compression
9	5050848X22P75	1	HOSE, Hydraulic, 22-3/4"
10	5021357	1	FILTER
11	5050848X9P75	1	HOSE, 9-3/4"
12	5021368	1	OIL COOLER
13	5021388	1	FITTING, Reducer
14	5021370	3	FITTING, NPT - Hose, 90 Deg.
15	5050857X29	1	HOSE, 29"
16	5050857X39	1	HOSE, 29"
17	5021372	2	FITTING, 3/8NPT-1/2" Hose, Straight
18	5021373	2	FITTING, O-Ring - NPT, Swivel
19	5021333	1	HYDRAULIC PUMP
20	5021362	2	FITTING, O-Ring - NPT, 45 Deg.
21	5021361	2	FITTING, 1/2 NPT, 45 Deg. Swivel
22	5021380	1	HOSE ASSEMBLY, 19"
23	5021381	1	HOSE ASSEMBLY, 17"
24	5021636	2	PLUG, O-Ring
25	5021621	2	HYDRAULIC WHEEL MOTOR
26	5021615	2	FITTING, 7/16" O-Ring 90 Degree Swivel
27	5021616	3	FITTING, Male Adapter
28	5020835	6	CLAMP, Hose
29	5050869X25	1	HOSE, 25"
30	5021618	1	FITTING, Tee
31	5021360	2	FITTING, Tee
32	5050869X2P25	1	HOSE, 2-1/4"
33	5050869X6P25	1	HOSE, 6-1/4"
34	5021383	1	HOSE ASSEMBLY, 13"
35	5021382	1	HOSE ASSEMBLY, 15"
36	5021620	1	FITTING, O-Ring - Hose
37	5050857X10P5	1	HOSE, 10-1/2"
38	5021617	1	FITTING, Reducer
39	5021378	1	FITTING, Reducer

Footnotes

The above parts group applies to the following Mfg. Nos.:
5901035 (S/N: 1023 & Above) (H3225K)
5901036 (H3227K)

© Copyright 2007 Briggs and Stratton. All Rights Reserved.

Hydraulic Group

NOTE: Unless noted otherwise, use the standard hardware torque specification chart.

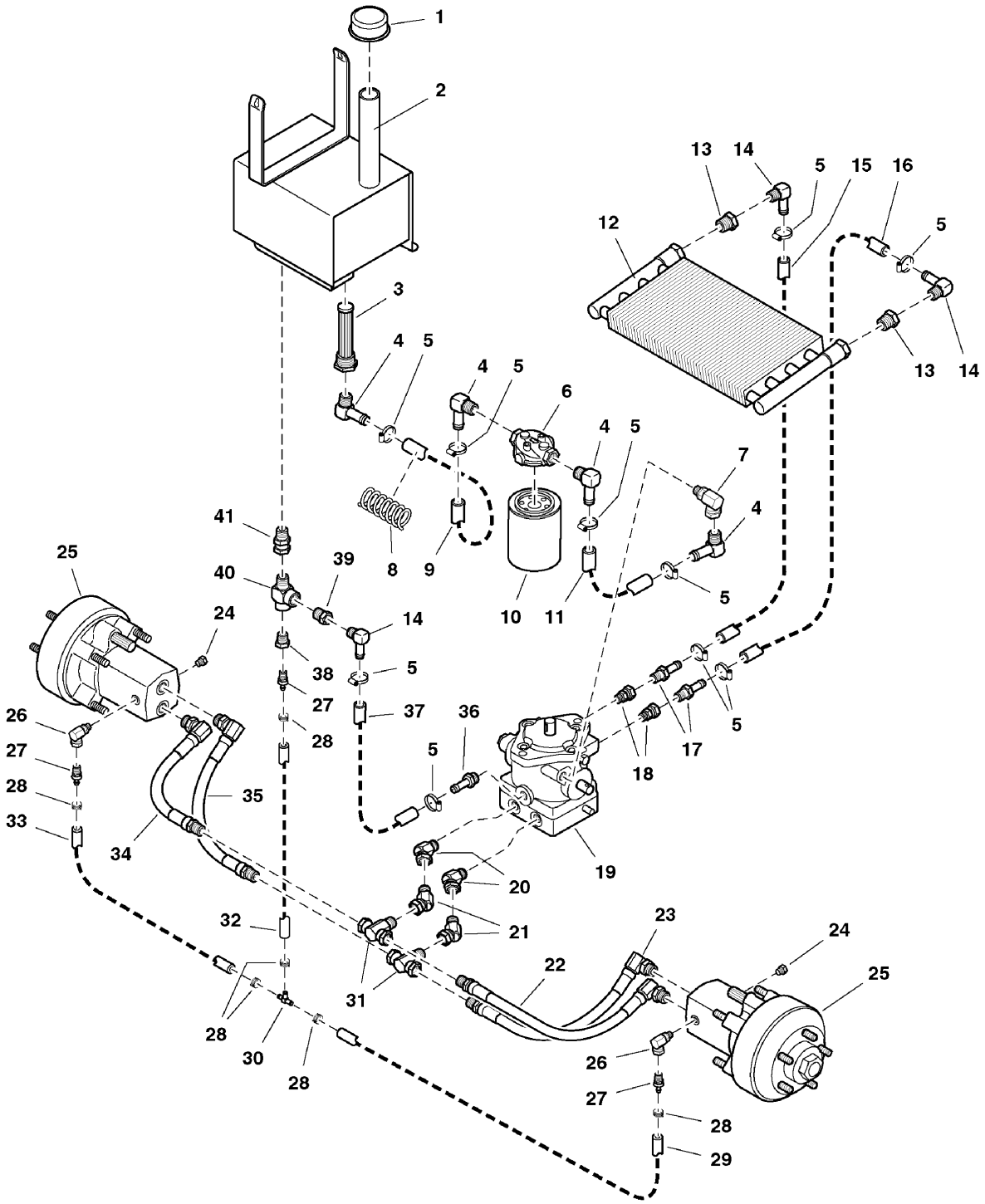

The above parts group applies to the following Mfg. Nos.:

5901035 (S/N: 1023 & Above) (H3225K)

5901036 (H3227K)

© Copyright 2007 Briggs and Stratton. All Rights Reserved.

Hydraulic Group

REF NO.	PART NO.	QTY.	DESCRIPTION
40	5021376	1	FITTING, Tee
41	5021377	1	FITTING, Straight Swivel
42	5025203X16	2	PIN, COTTER, 1/8" X 2" (NOT SHOWN)
43	5022042X3	2	NUT, CASTLE, 1-20 (NOT SHOWN)

Footnotes

The above parts group applies to the following Mfg. Nos.:
5901035 (S/N: 1023 & Above) (H3225K)
5901036 (H3227K)

© Copyright 2007 Briggs and Stratton. All Rights Reserved.

Parking Brake Group

NOTE: Unless noted otherwise, use the standard hardware torque specification chart.

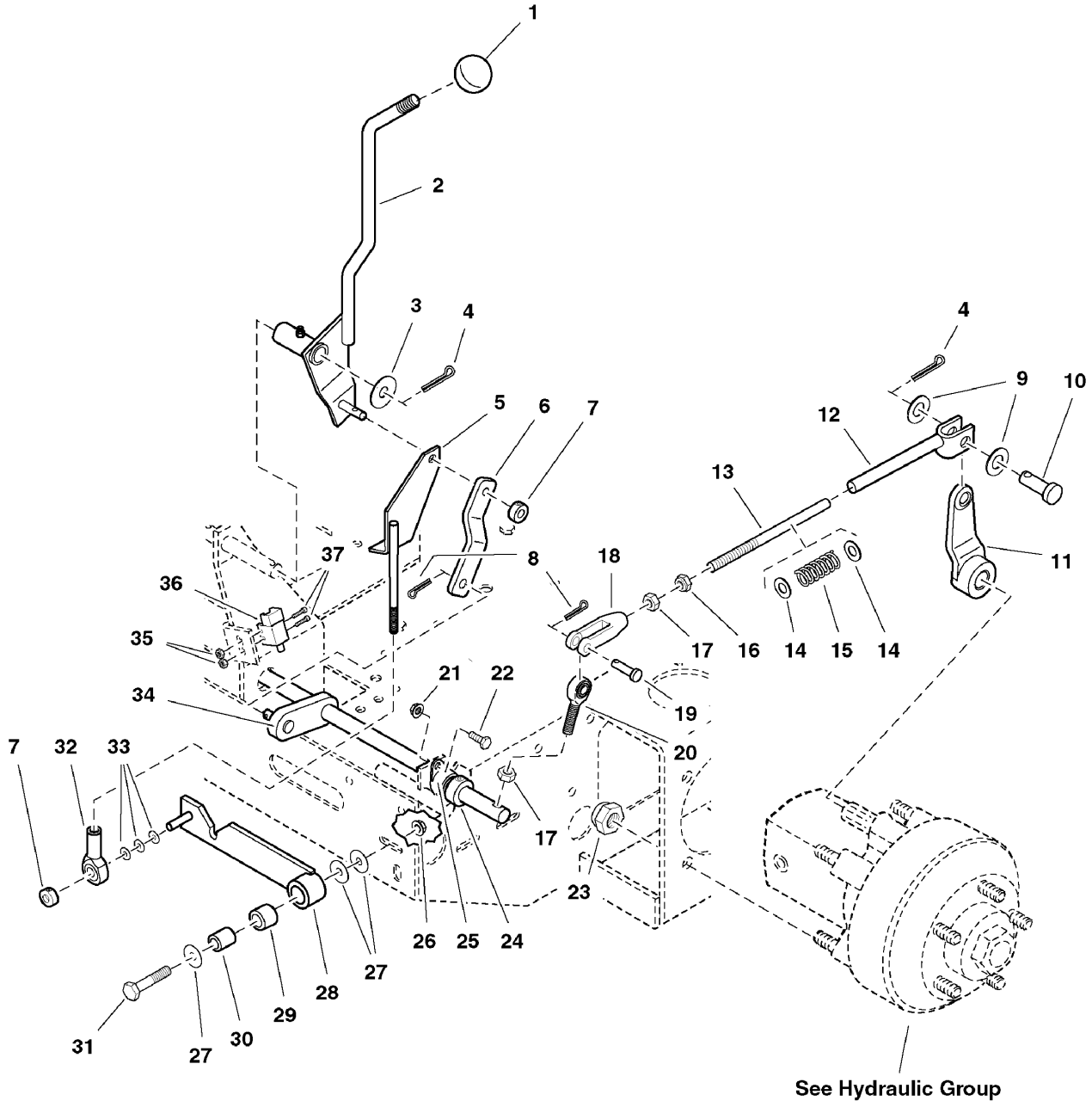

The above parts group applies to the following Mfg. Nos.:

5901035 (S/N: 1023 & Above) (H3225K)

5901036 (H3227K)

© Copyright 2007 Briggs and Stratton. All Rights Reserved.

Parking Brake Group

REF NO.	PART NO.	QTY.	DESCRIPTION
1	5021733	1	KNOB
2	5030919B	1	PARKING BRAKE LEVER
3	5025281	1	WASHER, 5/8" SAE
4	5025203X10	3	COTTER PIN, 1/8" X 1-1/4"
5	5043972B	1	BRAKE LOCK LINK
6	5044043B	1	BRAKE LINK
7	5020047	2	COLLAR, 5/16" Set
8	5025201X6	3	COTTER PIN, 3/32" x 3/4"
9	5025158	4	WASHER, 1/2" SAE
10	5025232X10	2	CLEVIS PIN, 1/2" x 1-1/4"
11	5021685	2	BRAKE LEVER
12	5044425B	2	BRAKE TUBE
13	5044422	2	BRAKE SPRING ROD
14	5025156	4	WASHER, 3/8" SAE
15	5021773	2	SPRING, Compression
16	5025097	2	NUT, 3/8-24 Hex Nylon Lock
17	5025035	4	NUT, 3/8-24 Hex
18	5021171	2	CLEVIS, 3/8-24, Plastic
19	5025214X9	2	CLEVIS PIN, 3/8 x 1-1/8
20	5021124	2	BALL JOINT, 3/8-24 Male
21	5025126	4	NUT, 1/4-20 Hex Serrated Flange
22	5025010X6	4	BOLT, 1/4-20 x 3/4
23	5025098	8	NUT, 1/2-20 Hex Nylon Lock
24	5010477	2	COLLAR, 5/8" Set
25	5020014	2	5/8" Triangle Bearing
26	5025139	1	NUT, 5/16-18 Hex Large Serrated Flange
27	5025164	3	WASHER, 5/16" Fender
28	5042317B	1	NEUTRAL LOCK LEVER, Complete (Includes Ref No. 29)
29	5020876B	1	BUSHING, Brass
30	5042134	1	SPACER, .32 x .75 x 1.06
31	5025011X16	1	BOLT, 5/16-18 x 2
32	5021146	1	BALL JOINT, 5/16-24 Female
33	5025155	3	WASHER, 5/16" SAE
34	5030911B	1	BRAKE SHAFT
35	25029	2	NUT, #10-24 Hex
36	5022095	1	SWITCH, Plunger, NO/NC
37	25179-6	2	SCREW, #10-24 x 3/4

Footnotes

The above parts group applies to the following Mfg. Nos.:
5901035 (S/N: 1023 & Above) (H3225K)
5901036 (H3227K)

© Copyright 2007 Briggs and Stratton. All Rights Reserved.

Deck Lift Group

NOTE: Unless noted otherwise, use the standard hardware torque specification chart.

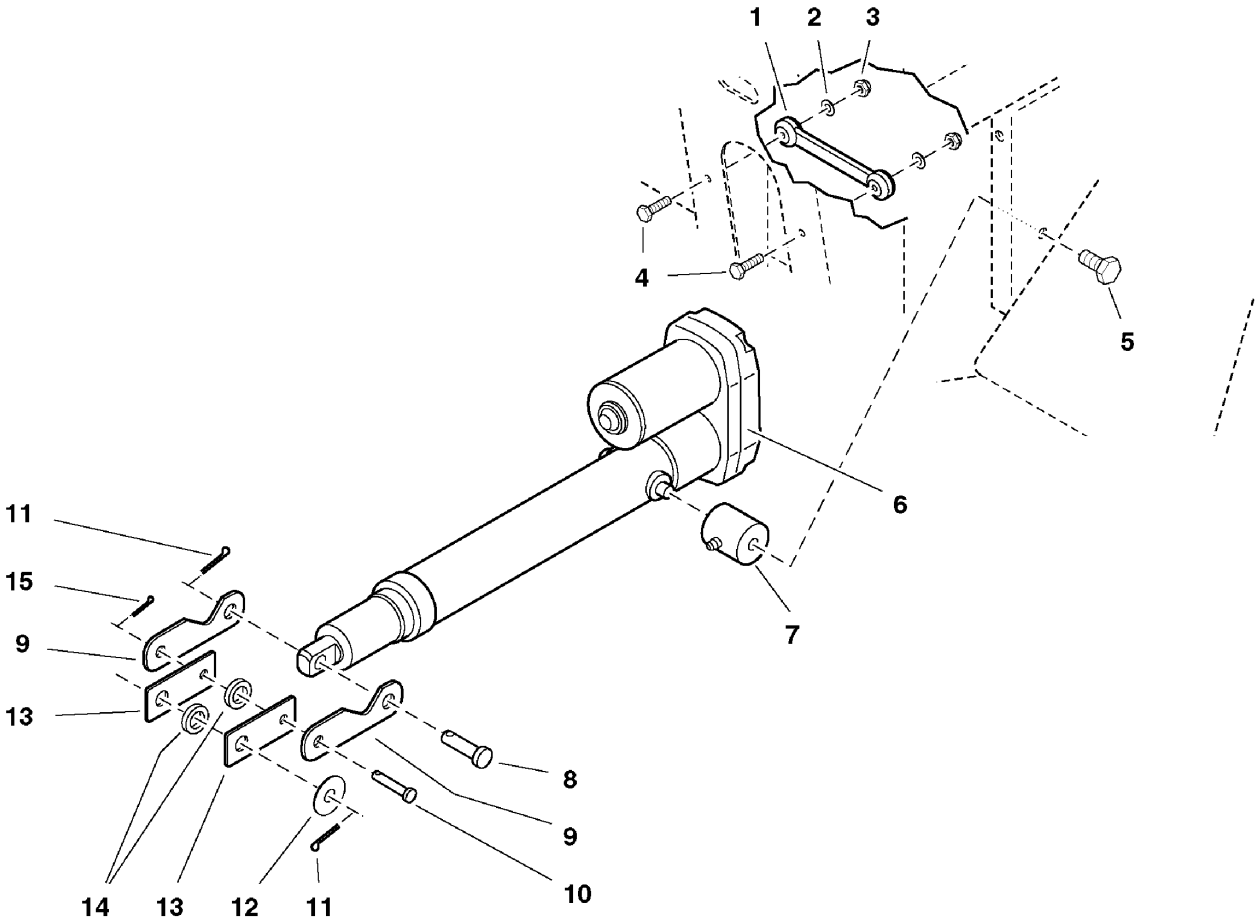

The above parts group applies to the following Mfg. Nos.:

5901035 (S/N: 1023 & Above) (H3225K)

5901036 (H3227K)

© Copyright 2007 Briggs and Stratton. All Rights Reserved.

Deck Lift Group

REF NO.	PART NO.	QTY.	DESCRIPTION
1	5020959	1	RUBBER STRAP
2	5025154	2	WASHER, 1/4" SAE
3	5025095	2	NUT, 1/4-20 Hex Nylon Lock
4	5025010X8	2	BOLT, 1/4-20 x 1
5	5025013X8	2	BOLT, 3/8-16 x 1
6	5043536	1	ELECTRIC ACTUATOR
7	5044082	2	ACTUATOR MOUNT
8	5043688	1	PIN, Clevis
9	5043677	2	ACTUATOR LINK, Lower
10	5025214X8	1	CLEVIS PIN, 3/8 x 1
11	5025203X10	2	COTTER PIN, 1/8" X 1-1/4"
12	5025281	1	WASHER, 5/8" SAE
13	5044618	2	ACTUATOR LINK, Upper
14	5041477	2	SPACER, .63 x 1.06 x .23
15	5025201X6	1	COTTER PIN, 3/32" x 3/4"

Footnotes

The above parts group applies to the following Mfg. Nos.:
5901035 (S/N: 1023 & Above) (H3225K)
5901036 (H3227K)

© Copyright 2007 Briggs and Stratton. All Rights Reserved.

Tire & Wheel Group

NOTE: Unless noted otherwise, use the standard hardware torque specification chart.

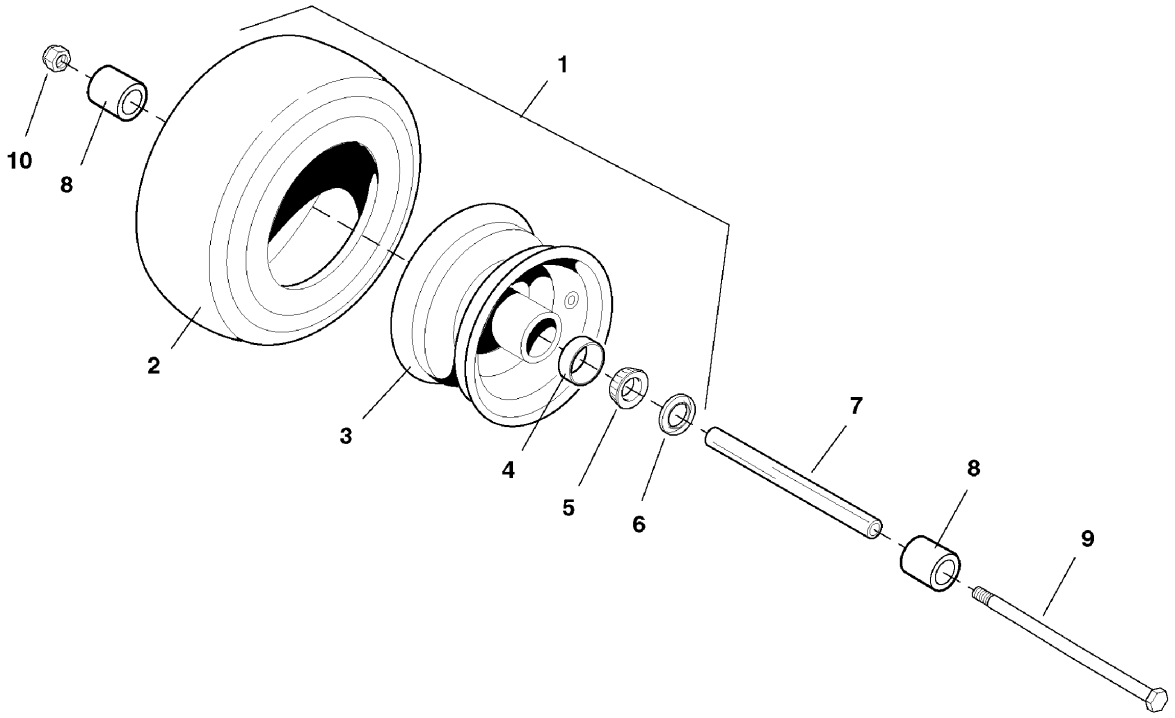

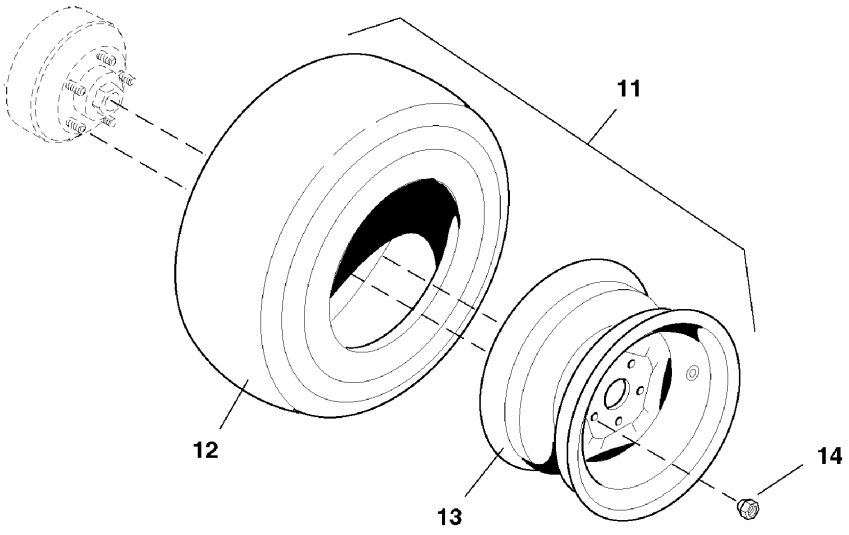

The above parts group applies to the following Mfg. Nos.:

5901035 (S/N: 1023 & Above) (H3225K)

5901036 (H3227K)

© Copyright 2007 Briggs and Stratton. All Rights Reserved.

Tire & Wheel Group

REF NO.	PART NO.	QTY.	DESCRIPTION
1	5021150S	1	WHEEL & TIRE ASSEMBLY, 18 x 7.5 x 8, Silver, Complete (Includes Ref No. 2 - 6)
1	5021150	1	WHEEL & TIRE ASSEMBLY, 18 x 7.5 x 8, White, Complete (Includes Ref No. 2 - 6)
2	5021215	1	TIRE, Rear, 18 x 7.5 x 8
3	21216S	1	WHEEL ASSEMBLY, 8 x 3.75, Silver, Complete (Includes Ref No. 4 - 6)
3	5021216	1	WHEEL ASSEMBLY, 8 x 3.75, White, Complete (Includes Ref No. 4 - 6)
4	5020883	2	BEARING CUP
5	5020884	2	BEARING, Tapered Roller
6	5020885	2	GREASE SEAL
7	5042314	1	STEERING TIRE AXLE
8	5042315	2	SPACER, 1.01 X 1.25 X 2.06
9	5025019X76	1	BOLT, 5/8-11 x 9-1/2
10	5025103	1	NUT, 5/8-11 Hex Side Lock
11	5021353S	2	WHEEL & TIRE ASSEMBLY, 23 x 10.5-12, Silver, Complete (Includes Ref No. 12 & 13)
11	5021353	2	WHEEL & TIRE ASSEMBLY, 23 x 10.5-12, White, Complete (Includes Ref No. 12 & 13)
12	5021353X1	2	TIRE, 23 x 10.5-12
13	5021353SX2	2	WHEEL ASSEMBLY, Silver
13	5021353X2	2	WHEEL ASSEMBLY, White
14	5020601	10	LUG NUT, 1/2-20

Footnotes

The above parts group applies to the following Mfg. Nos.:
5901035 (S/N: 1023 & Above) (H3225K)
5901036 (H3227K)

© Copyright 2007 Briggs and Stratton. All Rights Reserved.

Decal Group - Brand & Model

NOTE: Unless noted otherwise, use the standard hardware torque specification chart.

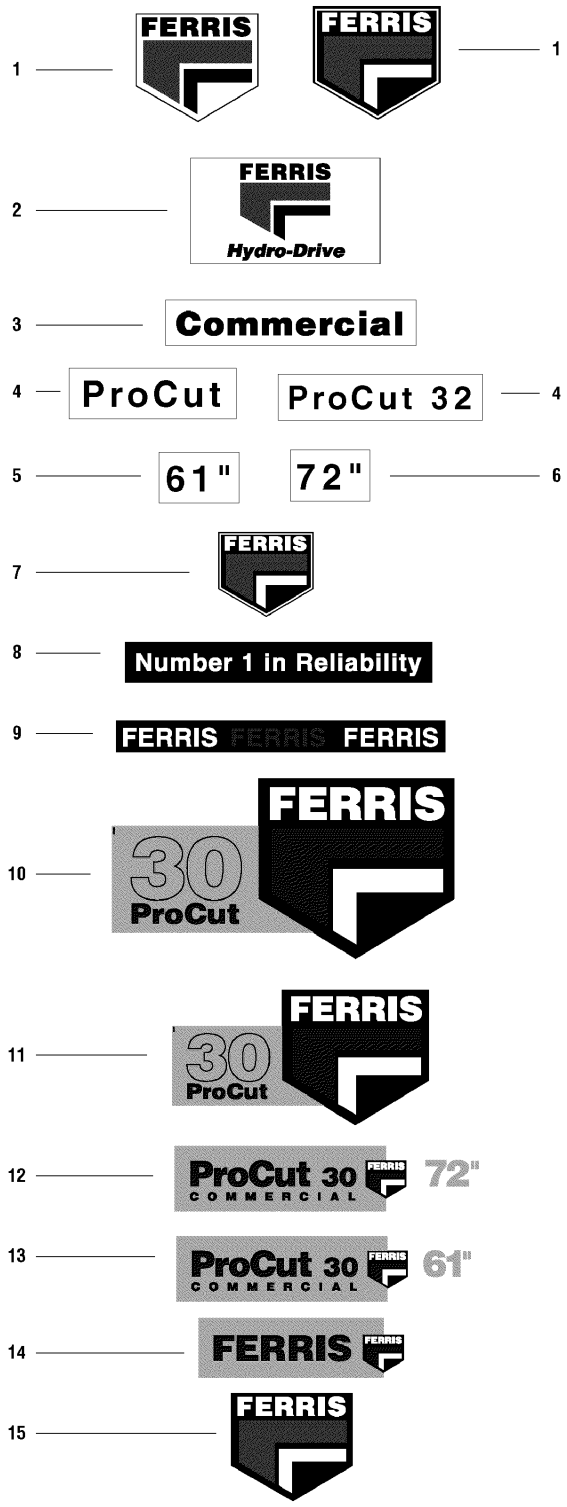

The above parts group applies to the following Mfg. Nos.:

5901035 (S/N: 1023 & Above) (H3225K)

5901036 (H3227K)

© Copyright 2007 Briggs and Stratton. All Rights Reserved.

Decal Group - Brand & Model

REF NO.	PART NO.	QTY.	DESCRIPTION
1	5020852	2	DECAL, Ferris Logo, 10-3/4"
2	5021126	1	DECAL, Hydro Drive
3	5020846	1	DECAL, Commercial
4	5021300	1	DECAL, ProCut
4	5022292	1	DECAL, ProCut 32
5	5021302	1	DECAL, 61"
6	5021416	2	DECAL, 72"
7	5022227	1	DECAL, Ferris Logo, 6-3/8"
8	5022229	1	DECAL, Number One In Reliability
9	5022240	1	DECAL, Ferris Text
10	5022547	1	DECAL, Ferris Logo (72" deck)
11	5022545	1	DECAL, Ferris Logo (61" deck)
12	5022548	1	DECAL, ProCut 3072
13	5022546	1	DECAL ProCut 3061
14	5022560	1	DECAL, Ferris Text Logo
15	5022227	1	DECAL, Ferris Logo, 6-3/8"

Footnotes

The above parts group applies to the following Mfg. Nos.:
5901035 (S/N: 1023 & Above) (H3225K)
5901036 (H3227K)

© Copyright 2007 Briggs and Stratton. All Rights Reserved.

Decal Group - Safety & Operation

NOTE: Unless noted otherwise, use the standard hardware torque specification chart.

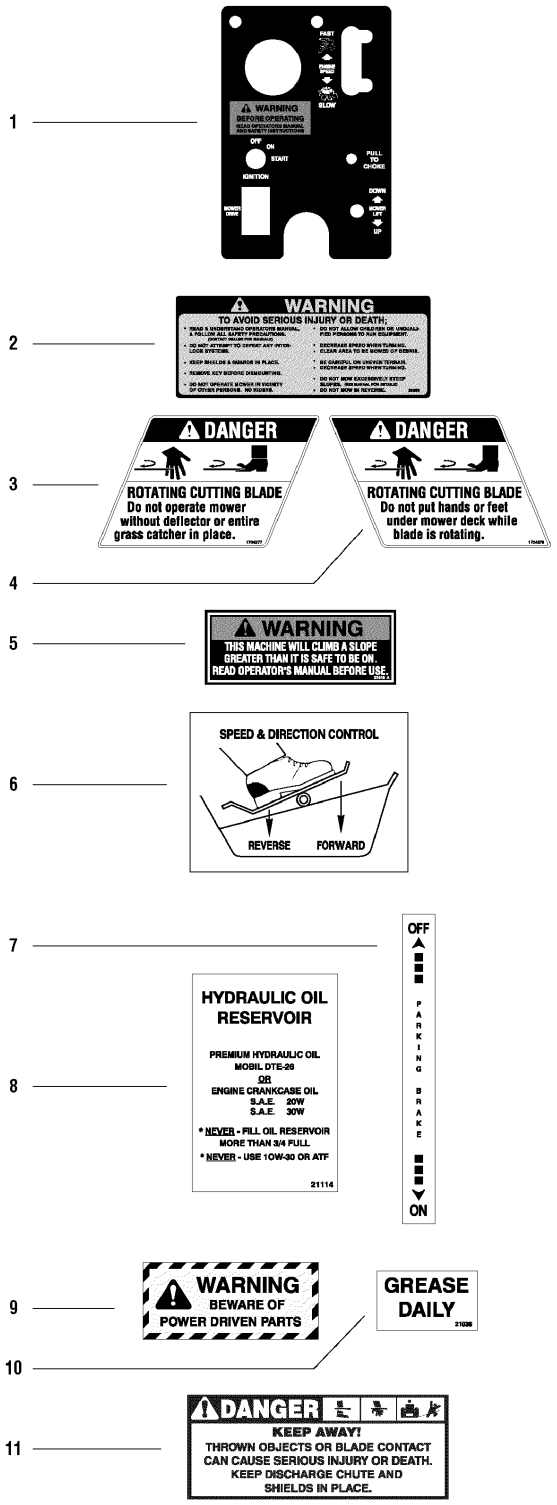

The above parts group applies to the following Mfg. Nos.:

5901035 (S/N: 1023 & Above) (H3225K)

5901036 (H3227K)

© Copyright 2007 Briggs and Stratton. All Rights Reserved.

Decal Group - Safety & Operation

REF NO.	PART NO.	QTY.	DESCRIPTION
1	5022195	1	DECAL, Dash
2	5020850	1	DECAL, WARNING Operation
3	1704277	1	DECAL, Danger (Chute In Place)
4	1704276	1	DECAL, Danger (Hand Under Deck)
5	5021818	1	DECAL, Warning, Machine Will Climb
6	5021111	1	DECAL, Speed Control
7	5021109	1	DECAL, Parking Brake
8	5044449	1	DECAL, Oil Reservoir
9	5020337	1	DECAL, Warning
10	5021036	2	DECAL, Grease Daily
11	5020851	3	DECAL, Danger
12	-	2	TAG, MODEL/SERIAL (Not Serviced) (Not a serviceable part)
13	-	1	DECAL, Patent Number (Not Serviced) (Not a serviceable part)

Footnotes

The above parts group applies to the following Mfg. Nos.:
5901035 (S/N: 1023 & Above) (H3225K)
5901036 (H3227K)

© Copyright 2007 Briggs and Stratton. All Rights Reserved.

Oil Cooler Mount Group

NOTE: Unless noted otherwise, use the standard hardware torque specification chart.

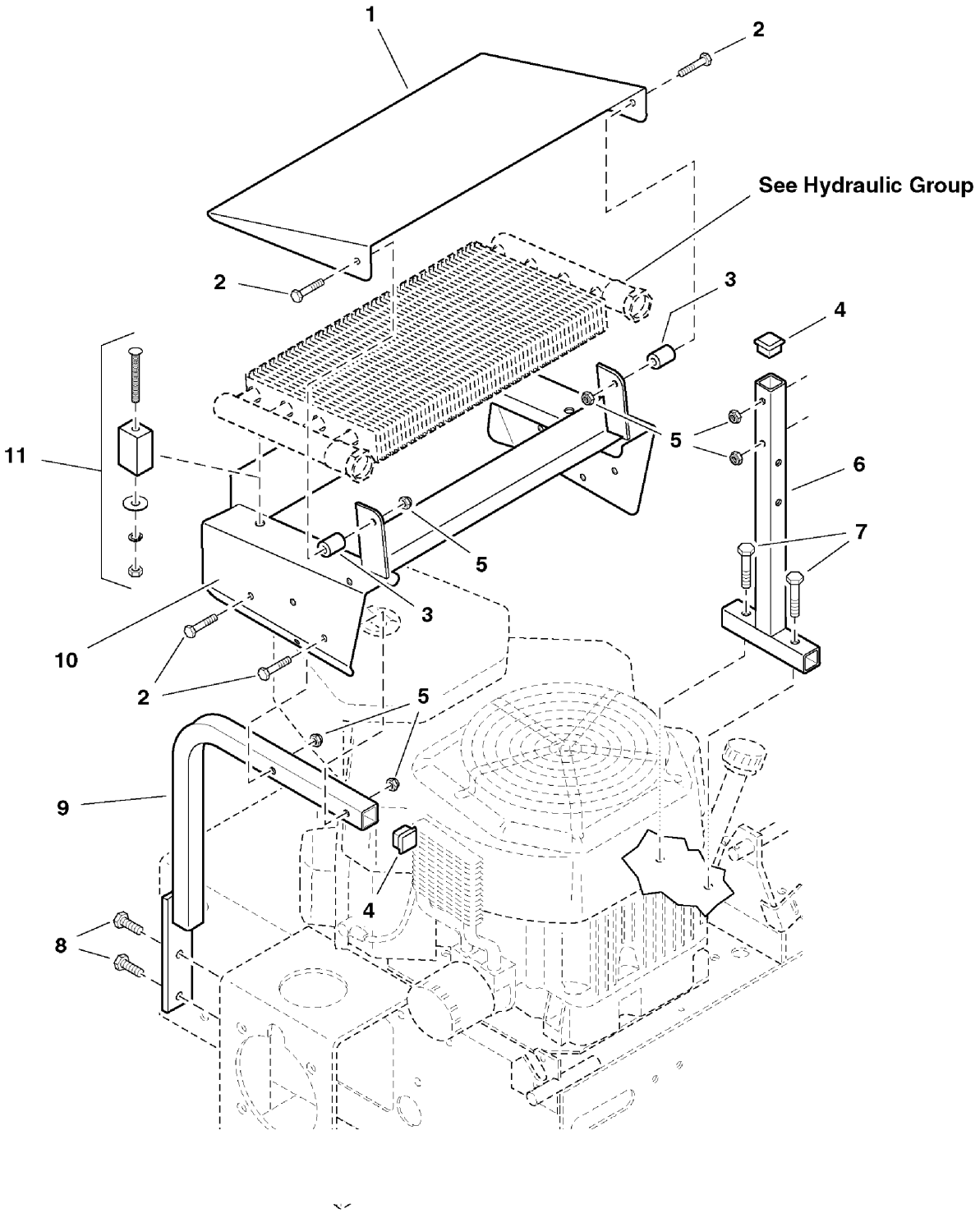

The above parts group applies to the following Mfg. Nos.:

5901035 (S/N: 1023 & Above) (H3225K)
5901036 (H3227K)

© Copyright 2007 Briggs and Stratton. All Rights Reserved.

Oil Cooler Mount Group

REF NO.	PART NO.	QTY.	DESCRIPTION
1	5042951B	1	OIL COOLER HOOD
2	5025010X12	6	BOLT, 1/4-20 X 1-1/2
3	5044735	2	SPACER, .27 x .75 x .94
4	5021686	2	CAP
5	5025095	6	NUT, 1/4-20 Hex Nylon Lock
6	5044065B	1	OIL COOLER MOUNT - RH
7	5025011X12	2	BOLT, 5/16-18 x 1-1/2
8	5025011X8	2	BOLT, 5/16-18 x 1
9	5044148B	1	OIL COOLER MOUNT - LH
10	5044075B	1	OIL COOLER MOUNT
11	5022153	4	MOUNT KIT

Footnotes

The above parts group applies to the following Mfg. Nos.:
5901035 (S/N: 1023 & Above) (H3225K)
5901036 (H3227K)

© Copyright 2007 Briggs and Stratton. All Rights Reserved.

Operator Presence Group

NOTE: Unless noted otherwise, use the standard hardware torque specification chart.

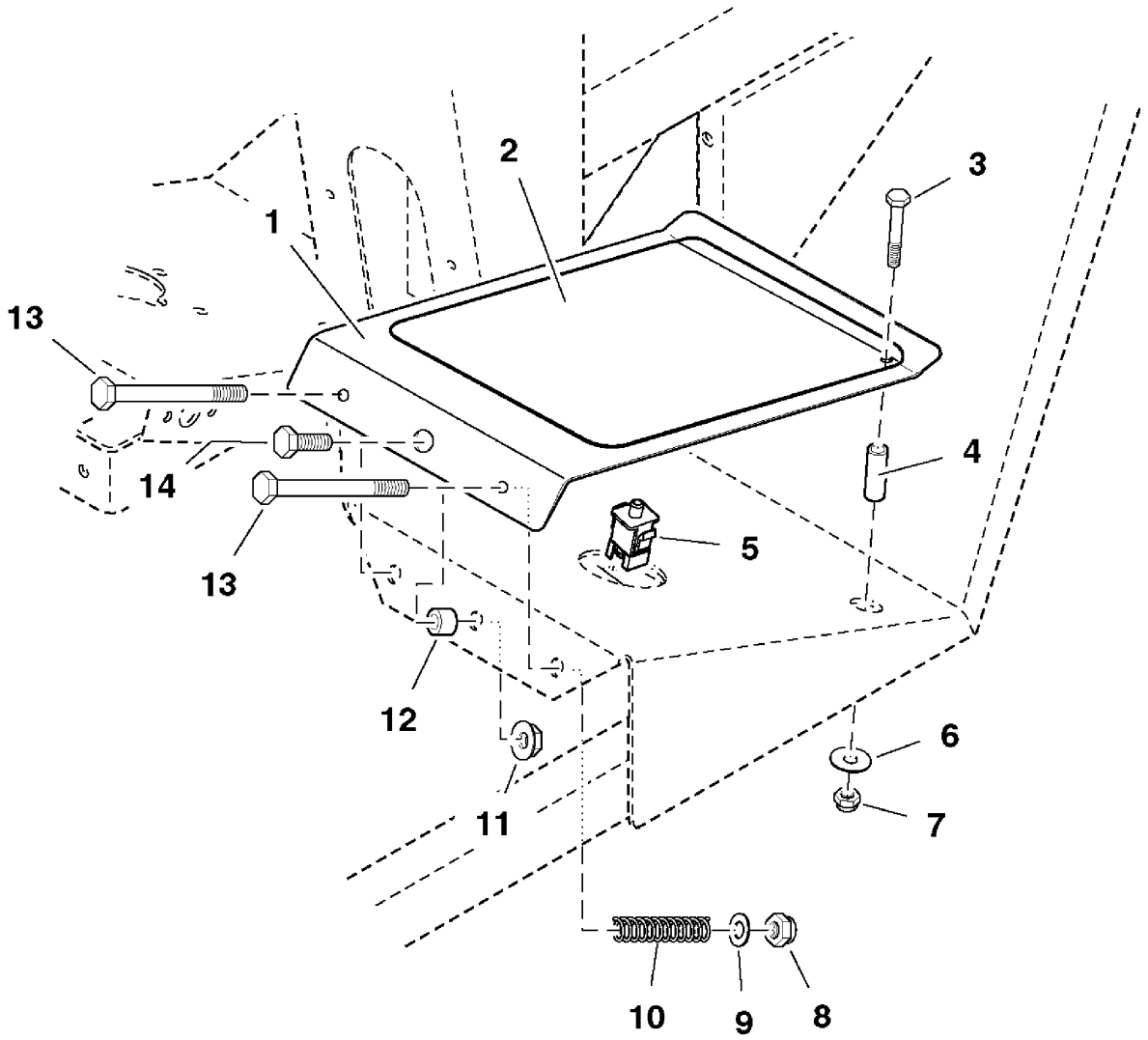

The above parts group applies to the following Mfg. Nos.:

5901035 (S/N: 1023 & Above) (H3225K)

5901036 (H3227K)

© Copyright 2007 Briggs and Stratton. All Rights Reserved.

Operator Presence Group

REF NO.	PART NO.	QTY.	DESCRIPTION
1	5045196B	1	OPERATOR PRESENCE PLATE
2	5022200	1	SAFETY WALK
3	5025011X16	1	BOLT, 5/16-18 x 2
4	5043296	1	BUSHING, Brass
5	5022198	1	SWITCH, Plunger, Snap-In, NO/NO
6	5025164	1	WASHER, 5/16" Fender
7	5025057	1	NUT, 5/16-18 Hex Nylon Lock
8	5025096	2	NUT, 3/8-16 Hex Nylon Lock
9	5025156	2	WASHER, 3/8" SAE
10	5021102	2	SPRING, Compression
11	5025128	1	NUT, 3/8-16 Hex Serrated Flange
12	5020880	1	INSERT, Bearing
13	5025013X28	2	BOLT, 3/8-16 x 3-1/2
14	5025013X8	1	BOLT, 3/8-16 x 1

Footnotes

The above parts group applies to the following Mfg. Nos.:
5901035 (S/N: 1023 & Above) (H3225K)
5901036 (H3227K)

© Copyright 2007 Briggs and Stratton. All Rights Reserved.

61" Mower Deck - Housing, Covers, Spindles & Blades

NOTE: Unless noted otherwise, use the standard hardware torque specification chart.

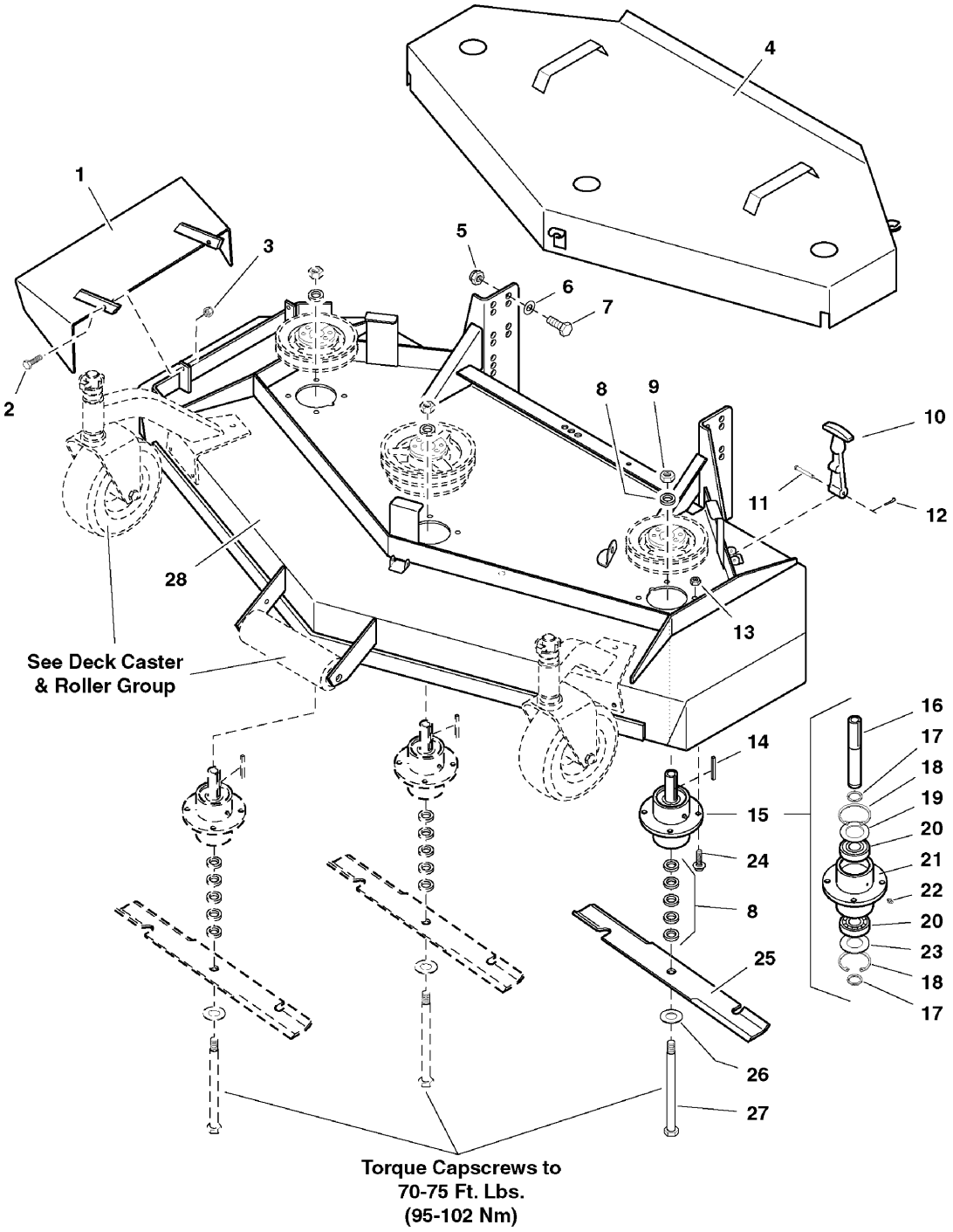

The above parts group applies to the following Mfg. Nos.:
5900227 (S/N: 1022 & Above) (P61)

© Copyright 2007 Briggs and Stratton. All Rights Reserved.

61" Mower Deck - Housing, Covers, Spindles & Blades

REF NO.	PART NO.	QTY.	DESCRIPTION
1	5041668B	1	DISCHARGE CHUTE
2	5025011X8	2	BOLT, 5/16-18 x 1
3	5025057	2	NUT, 5/16-18 Hex Nylon Lock
4	5030822B	1	61" SPINDLE COVER
5	5025098	8	NUT, 1/2-20 Hex Nylon Lock
6	5025158	8	WASHER, 1/2" SAE
7	5025018X10	8	BOLT, 1/2-20 x 1-1/4
8	5041477	18	SPACER, .63 x 1.06 x .23
9	5025040	3	NUT, 5/8-11 Hex
10	5020841X1	3	RUBBER LATCH
11	5020841X4	3	CLEVIS PIN
12	5020841X5	3	COTTER PIN
13	5025057	12	NUT, 5/16-18 Hex Nylon Lock
14	5050407X9	3	KEY, 1/4 SQ. X 2-1/2
15	5030301	3	SPINDLE ASSEMBLY, Complete
16	5041480	3	SPINDLE SHAFT
17	5020864	6	SNAP RING, External
18	5020866	6	SNAP RING, Internal
19	5041653	3	SPINDLE WASHER, Top
20	5020828	6	BEARING
21	5030293	3	SPINDLE HOUSING
22	5020095	3	GREASE FITTING
23	5041672	3	SPINDLE WASHER, Bottom
24	5023156	12	BOLT, Flange Head, 5/16-18 x 1-1/4
25	5020842	3	MOWER BLADE, 21"
26	5025159	3	WASHER, 5/8" USS
27	5025019X76	3	BOLT, 5/8-11 x 9-1/2
28	6630821	1	61" MOWER HOUSING ASSEMBLY (Includes safety decals)

Footnotes

The above parts group applies to the following Mfg. Nos.:
5900227 (S/N: 1022 & Above) (P61)

© Copyright 2007 Briggs and Stratton. All Rights Reserved.

61" Mower Deck - Pulleys, Belt & Idler Arm

NOTE: Unless noted otherwise, use the standard hardware torque specification chart.

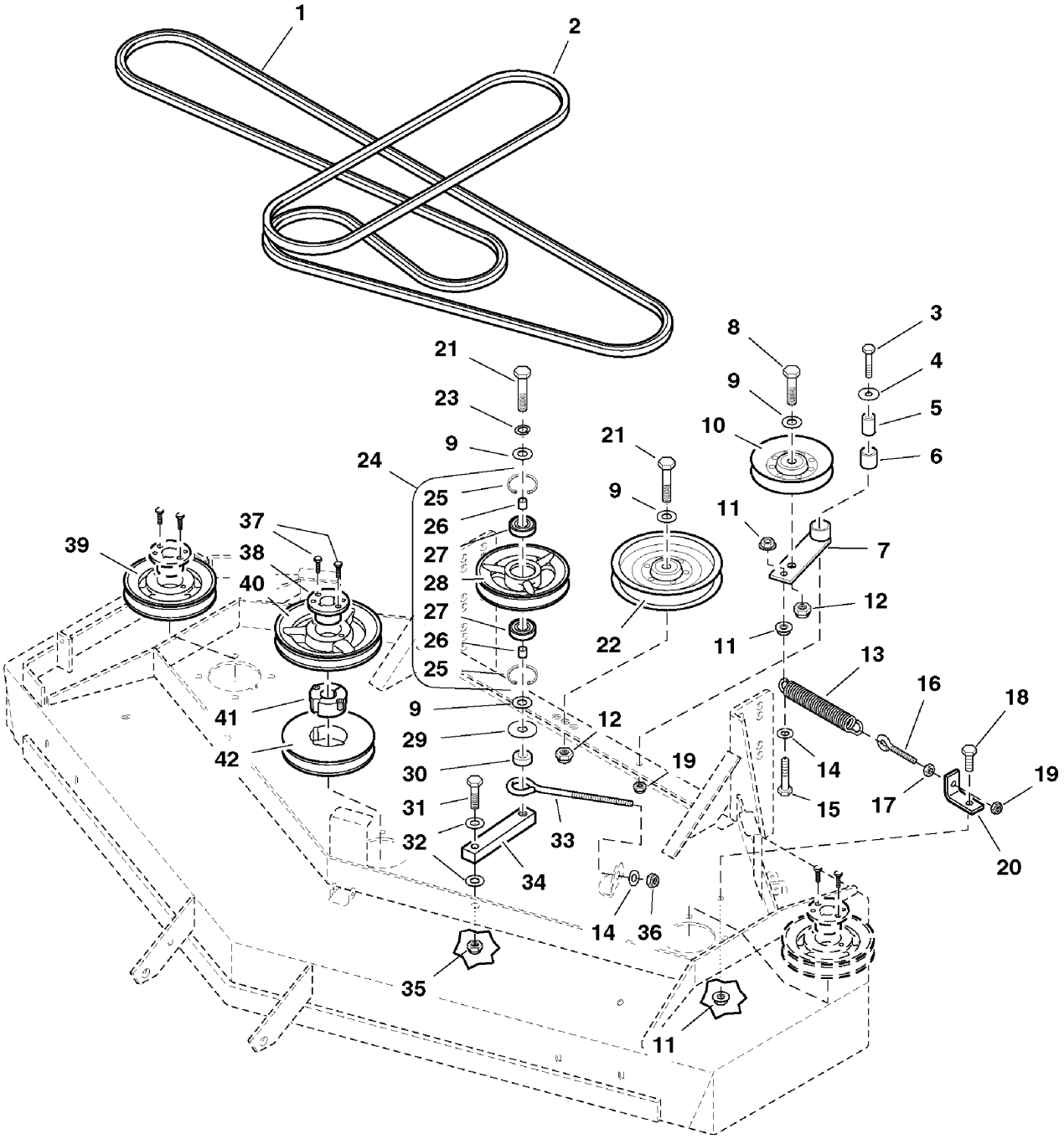

The above parts group applies to the following Mfg. Nos.:
5900227 (S/N: 1022 & Above) (P61)

© Copyright 2007 Briggs and Stratton. All Rights Reserved.

61" Mower Deck - Pulleys, Belt & Idler Arm

REF NO.	PART NO.	QTY.	DESCRIPTION
1	5020824	1	BELT, Blade Spindle
2	5021679	1	BELT, Deck Drive
3	5025011X14	1	BOLT, 5/16-18 x 1-3/4
4	5025164	1	WASHER, 5/16" Fender
5	5042134	1	SPACER, .32 x .75 x 1.06
6	5020876B	1	BUSHING, Brass
7	5042145B	1	IDLER ARM, Complete
8	5025018X16	1	BOLT, 1/2-20 x 2
9	5025158	4	WASHER, 1/2" SAE
10	5021097	1	PULLEY, V-Idler
11	5025128	3	NUT, 3/8-16 Hex Serrated Flange
12	5025098	2	NUT, 1/2-20 Hex Nylon Lock
13	5021103	1	SPRING, Extension
14	5025156	2	WASHER, 3/8" SAE
15	5025013X16	1	BOLT, 3/8-16 x 2
16	-	1	EYEBOLT
17	5025032	1	NUT, 5/16-18 Hex
18	5025013X8	1	BOLT, 3/8-16 x 1
19	5025057	2	NUT, 5/16-18 Hex Nylon Lock
20	5042142B	1	SPRING ANCHOR
21	5025018X18	2	BOLT, 1/2-20 x 2-1/4
22	5021096	1	PULLEY, Backside Idler
23	5025173	1	WASHER, 1/2" Lock
24	5030819	1	IDLER PULLEY, Complete
25	5020865	2	SNAP RING, Internal
26	5020870	2	INSERT, Bearing
27	5020827	2	BEARING
28	5041481	1	PULLEY, Idler
29	5025150	1	WASHER, 1/2" USS
30	5044609	1	SPACER, .52 X 1.00 X .38
31	5025016X14	1	BOLT, 7/16-20 X 1-3/4
32	5025157	2	WASHER, 7/16" SAE
33	5021811	1	EYEBOLT, 3/8" x 8"
34	5044610B	1	ARM, Idler
35	5025094	1	NUT, 7/16-20 Hex Nylon Lock
36	5025096	1	NUT, 3/8-16 Hex Nylon Lock
37	5025010X8	6	BOLT, 1/4-20 x 1
38	5020819	3	BUSHING, Tapered Hub
39	5020814	2	PULLEY, Spindle
40	5020815	1	PULLEY, Spindle
41	5022160	1	BUSHING, Taper Lock

Footnotes

The above parts group applies to the following Mfg. Nos.:
5900227 (S/N: 1022 & Above) (P61)

© Copyright 2007 Briggs and Stratton. All Rights Reserved.

61" Mower Deck - Pulleys, Belt & Idler Arm

NOTE: Unless noted otherwise, use the standard hardware torque specification chart.

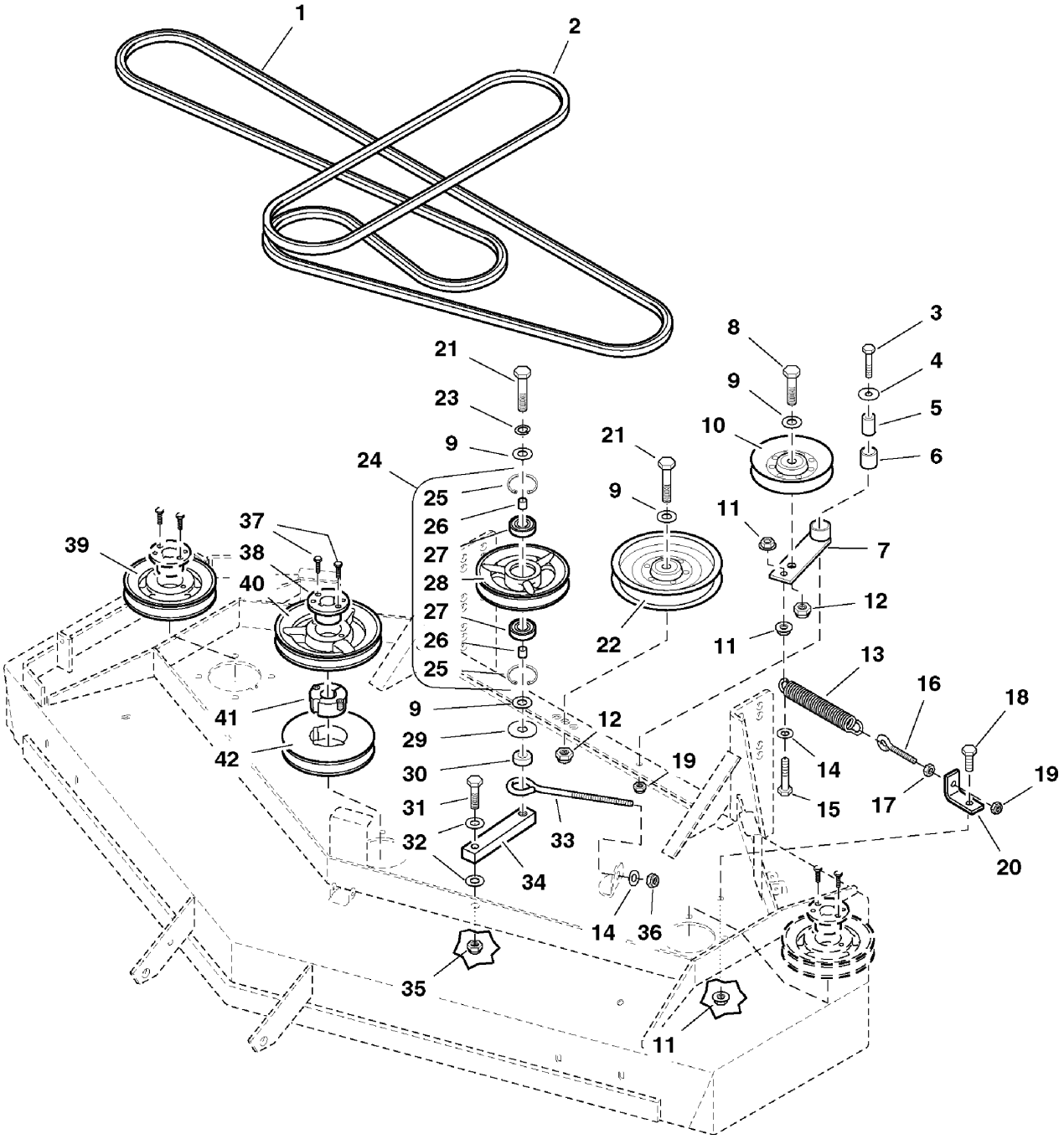

The above parts group applies to the following Mfg. Nos.:
5900227 (S/N: 1022 & Above) (P61)

© Copyright 2007 Briggs and Stratton. All Rights Reserved.

61" Mower Deck - Pulleys, Belt & Idler Arm

REF NO.	PART NO.	QTY.	DESCRIPTION
42	5022159	1	PULLEY, Taper Lock

Footnotes

The above parts group applies to the following Mfg. Nos.:
5900227 (S/N: 1022 & Above) (P61)

© Copyright 2007 Briggs and Stratton. All Rights Reserved.

61" Mower Deck - Rollers & Casters

NOTE: Unless noted otherwise, use the standard hardware torque specification chart.

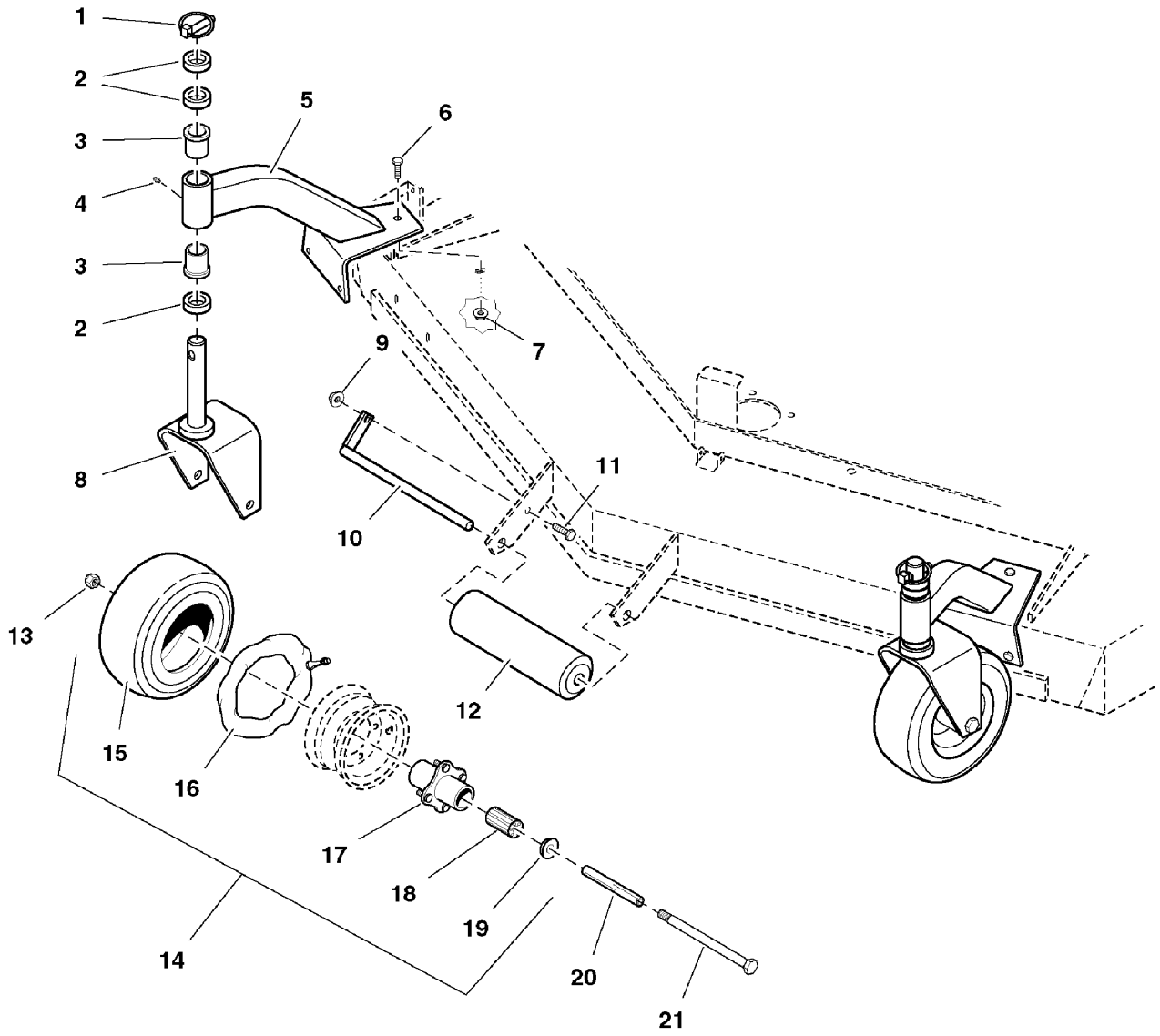

The above parts group applies to the following Mfg. Nos.:
5900227 (S/N: 1022 & Above) (P61)

© Copyright 2007 Briggs and Stratton. All Rights Reserved.

61" Mower Deck - Rollers & Casters

REF NO.	PART NO.	QTY.	DESCRIPTION
1	5020655	2	PIN, Lynch
2	5041476	6	SPACER, 1.02 x 1.56 x .50
3	5021541	4	BUSHING, Flange
4	5020095	2	GREASE FITTING
5	5043887	2	CASTER MOUNT, Complete (Includes Ref No. 3 & 4)
6	5025011X6	6	BOLT, 5/16-18 x 3/4
7	5025139	6	NUT, 5/16-18 Hex Large Serrated Flange
8	5041702B	2	YOKE, Caster
9	5025128	1	NUT, 3/8-16 Hex Serrated Flange
10	5041653	1	SPINDLE WASHER, Top
11	5025013X6	1	BOLT, 3/8-16 x 3/4
12	5020785	1	ROLLER
13	5025056	2	NUT, 1/2-13 Hex Nylon Lock
14	5021181S	2	WHEEL & TIRE ASSEMBLY, Silver, 9 x 3.5 x 4, Complete (Includes Ref No. 15 - 19)
14	5021181	2	WHEEL & TIRE ASSEMBLY, White, 9 x 3.5 x 4, Complete (Includes Ref No. 15 - 19)
15	5021181X1	2	TIRE, Front, 9 x 3.5 x 4
16	5021181X2	2	TUBE
17	5021181SX3	2	HUB & BEARING ASSEMBLY, Complete, Silver (Includes Ref No. 18 & 19)
17	5021181X3	2	HUB & BEARING ASSEMBLY, Complete, White (Includes Ref No. 18 & 19)
18	5021182	2	BEARING, Roller (1 per tire)
19	5021043	4	RETAINER, Bearing (2 per tire)
20	5041657	2	AXLE, Caster Wheel
21	5025017X44	2	BOLT, 1/2-13 x 5-1/2

Footnotes

The above parts group applies to the following Mfg. Nos.:
5900227 (S/N: 1022 & Above) (P61)

© Copyright 2007 Briggs and Stratton. All Rights Reserved.

72" Mower Deck - Housing, Covers, Spindles & Blades

NOTE: Unless noted otherwise, use the standard hardware torque specification chart.

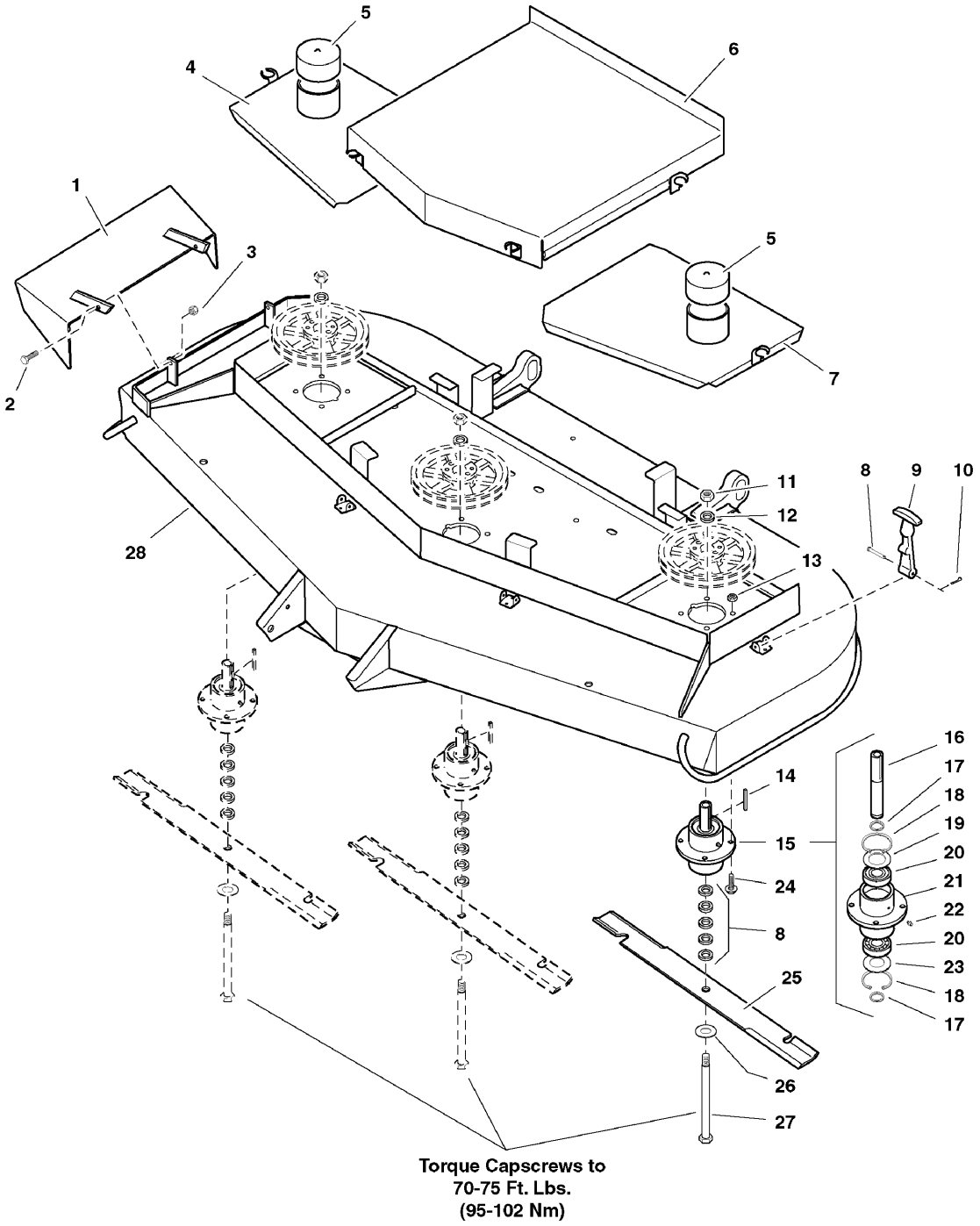

The above parts group applies to the following Mfg. Nos.:
5900228 (S/N: 1022 & Above) (P72)

© Copyright 2007 Briggs and Stratton. All Rights Reserved.

72" Mower Deck - Housing, Covers, Spindles & Blades

REF NO.	PART NO.	QTY.	DESCRIPTION
1	5044197B	1	DISCHARGE CHUTE
2	5025011X8	2	BOLT, 5/16-18 x 1
3	5025057	2	NUT, 5/16-18 Hex Nylon Lock
4	5049035B	1	SPINDLE COVER, RH
5	5021674	2	VINYL CAP
6	5044198B	1	CENTER DECK GUARD
7	5044180B	1	SPINDLE COVER-LH
8	5020841X4	3	CLEVIS PIN
9	5020841X1	3	RUBBER LATCH
10	5020841X5	3	COTTER PIN
11	5025040	3	NUT, 5/8-11 Hex
12	5041477	18	SPACER, .63 x 1.06 x .23
13	5025057	12	NUT, 5/16-18 Hex Nylon Lock
14	5050407X9	3	KEY, 1/4 SQ. X 2-1/2
15	5030301	3	SPINDLE ASSEMBLY, Complete
16	5041480	3	SPINDLE SHAFT
17	5020864	6	SNAP RING, External
18	5020866	6	SNAP RING, Internal
19	5041653	3	SPINDLE WASHER, Top
20	5020828	6	BEARING
21	5030293	3	SPINDLE HOUSING
22	5020095	3	GREASE FITTING
23	5041672	3	SPINDLE WASHER, Bottom
24	5023157	12	BOLT, Flange Head, 5/16-18 x 1-1/2
25	5021408	3	MOWER BLADE, 24-1/2"
26	5025159	3	WASHER, 5/8" USS
27	5025019X76	3	BOLT, 5/8-11 x 9-1/2
28	5600077	1	ASSM, MOWER DECK P72, SIDE DISCHARGE, COMPLETE (Includes safety decals)

Footnotes

The above parts group applies to the following Mfg. Nos.:
5900228 (S/N: 1022 & Above) (P72)

© Copyright 2007 Briggs and Stratton. All Rights Reserved.

72" Mower Deck - Pulleys, Belt & Idler Arm

NOTE: Unless noted otherwise, use the standard hardware torque specification chart.

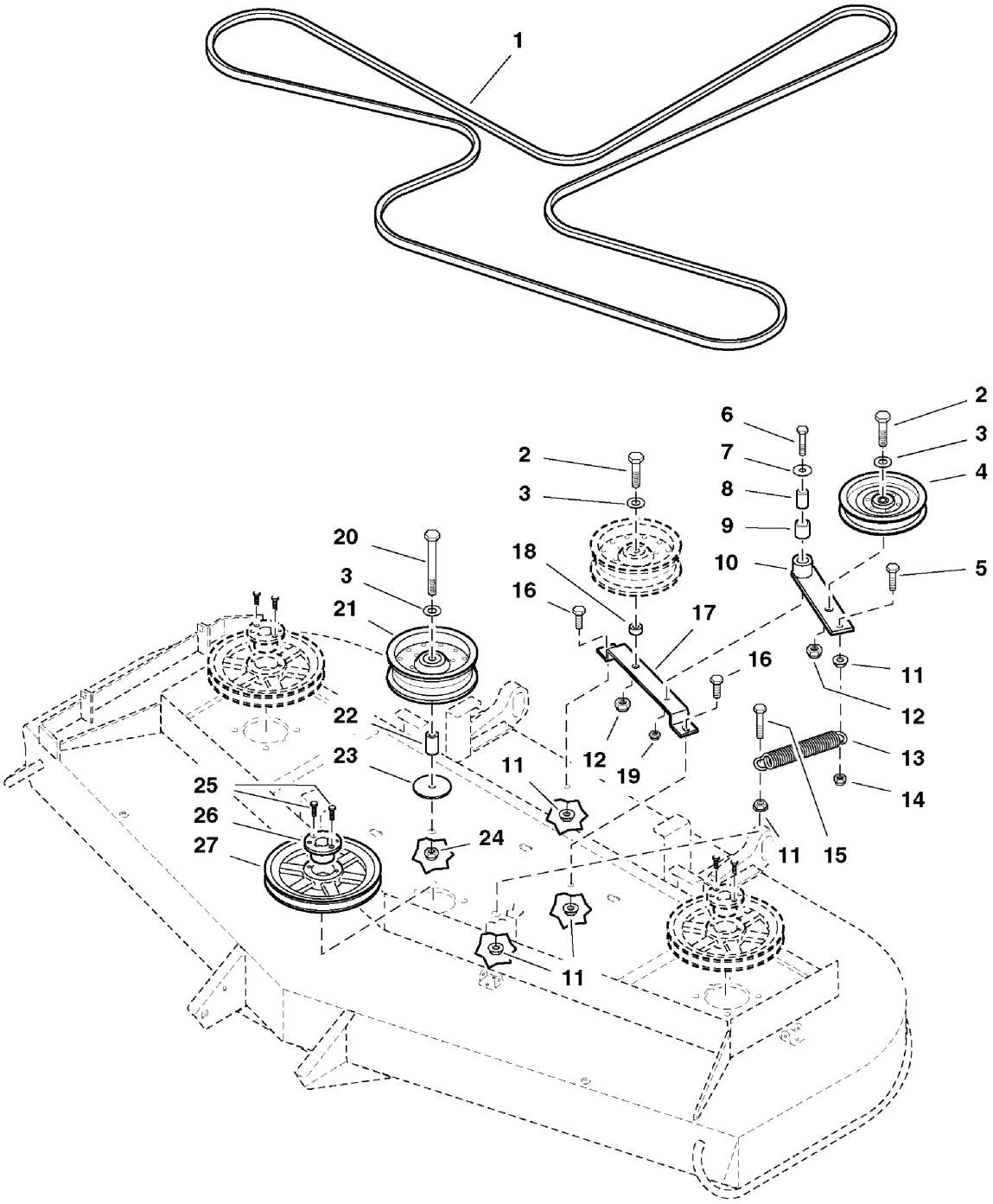

The above parts group applies to the following Mfg. Nos.:
5900228 (S/N: 1022 & Above) (P72)

© Copyright 2007 Briggs and Stratton. All Rights Reserved.

72" Mower Deck - Pulleys, Belt & Idler Arm

REF NO.	PART NO.	QTY.	DESCRIPTION
1	5021724	1	BELT
2	5025018X20	2	BOLT, 1/2-20 x 2-1/2
3	5025158	3	WASHER, 1/2" SAE
4	5044443	1	IDLER PULLEY
5	5025013X12	1	BOLT, 3/8-16 x 1-1/2
6	5025011X14	1	BOLT, 5/16-18 x 1-3/4
7	5025164	1	WASHER, 5/16" Fender
8	5042134	1	SPACER, .32 x .75 x 1.06
9	5020876B	1	BUSHING, Brass
10	5043007B	1	IDLER ARM, Complete (Includes Ref No. 9)
11	5025128	5	NUT, 3/8-16 Hex Serrated Flange
12	5025098	2	NUT, 1/2-20 Hex Nylon Lock
13	5021826	1	SPRING, Extension
14	5025096	1	NUT, 3/8-16 Hex Nylon Lock
15	5025013X16	1	BOLT, 3/8-16 x 2
16	5025013X8	2	BOLT, 3/8-16 x 1
17	5044174B	1	IDLER MOUNT
18	5044696	1	SPACER, .52 x 1.00 x .56
19	5025057	1	NUT, 5/16-18 Hex Nylon Lock
20	5025017X36	1	BOLT, 1/2-13 x 4-1/2
21	5021831	2	PULLEY, Idler
22	5044695	1	SPACER, .52 X 1.00 X 1.81
23	5043652	1	WASHER, Chain
24	5025056	1	NUT, 1/2-13 Hex Nylon Lock
25	5025010X8	6	BOLT, 1/4-20 x 1
26	5020819	3	BUSHING, Tapered Hub
27	5021410	3	PULLEY, Spindle

Footnotes

The above parts group applies to the following Mfg. Nos.:
5900228 (S/N: 1022 & Above) (P72)

© Copyright 2007 Briggs and Stratton. All Rights Reserved.

NOTE: Unless noted otherwise, use the standard hardware torque specification chart.

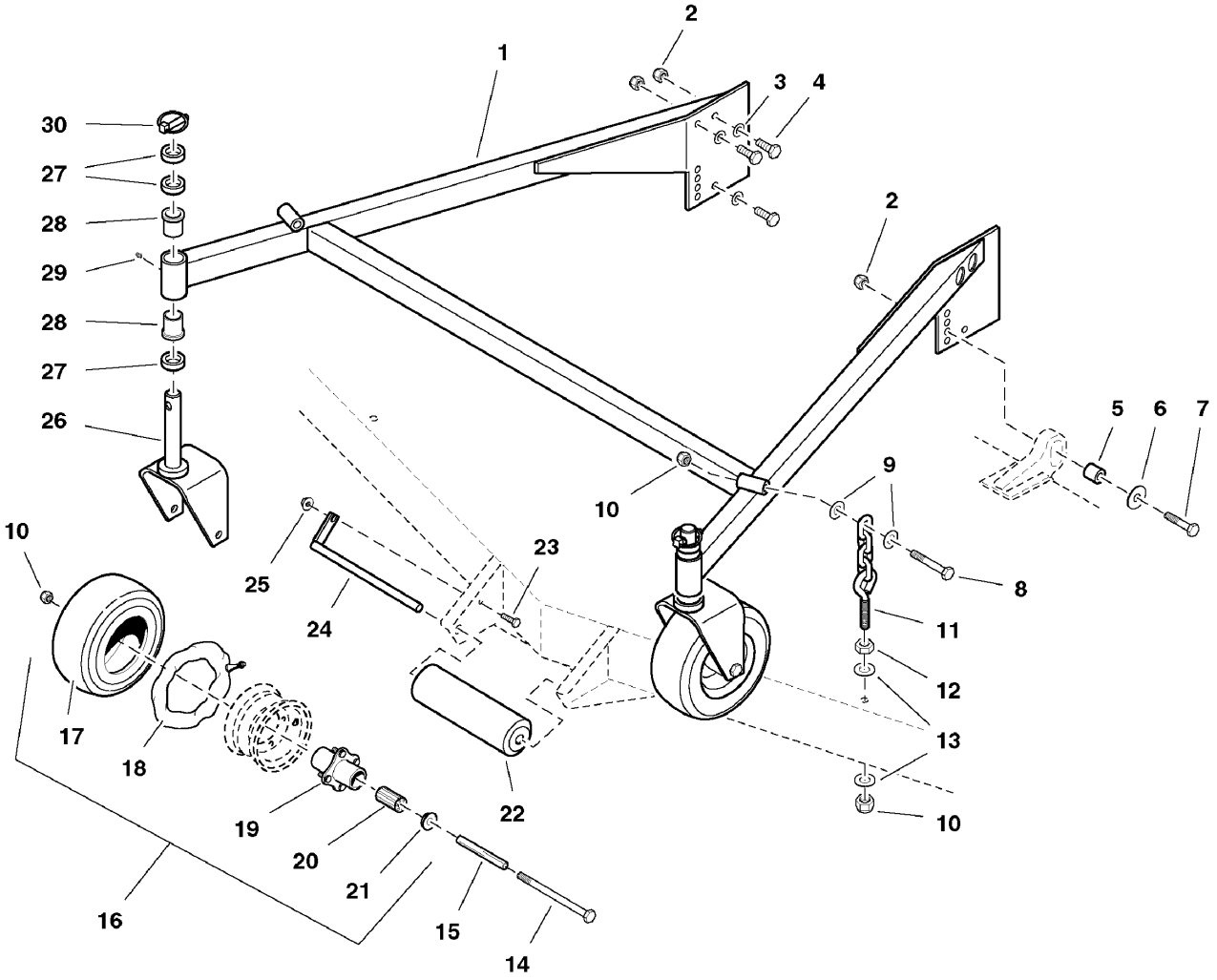

The above parts group applies to the following Mfg. Nos.:
5900228 (S/N: 1022 & Above) (P72)

© Copyright 2007 Briggs and Stratton. All Rights Reserved.

72" Mower Deck - Rollers & Casters

REF NO.	PART NO.	QTY.	DESCRIPTION
1	5044257	1	CASTER MOUNT FRAME, Complete (Includes Ref. No 28 & 29)
2	5025098	8	NUT, 1/2-20 Hex Nylon Lock
3	5025158	6	WASHER, 1/2" SAE
4	5025018X10	6	BOLT, 1/2-20 x 1-1/4
5	5044166	2	DECK MOUNT SPACER
6	5044167	2	WASHER
7	5025018X20	2	BOLT, 1/2-20 x 2-1/2
8	5025017X28	2	BOLT, 1/2-13 x 3-1/2
9	5025158	4	WASHER, 1/2" SAE
10	5025056	6	NUT, 1/2-13 Hex Nylon Lock
11	5044199	2	DECK HANGER
12	5025038	2	NUT, 1/2-13 Hex
13	5025150	4	WASHER, 1/2" USS
14	5025017X44	2	BOLT, 1/2-13 x 5-1/2
15	5041657	2	AXLE, Caster Wheel
16	5021181S	2	WHEEL & TIRE ASSEMBLY, Silver, 9 x 3.5 x 4, Complete (Includes Ref No. 17 - 21)
16	5021181	2	WHEEL & TIRE ASSEMBLY, White, 9 x 3.5 x 4, Complete (Includes Ref No. 17 - 21)
17	5021181X1	2	TIRE, Front, 9 x 3.5 x 4
18	5021181X2	2	TUBE
19	5021181SX3	2	HUB & BEARING ASSEMBLY, Complete, Silver (Includes Ref No. 20 & 21)
19	5021181X3	2	HUB & BEARING ASSEMBLY, Complete, White (Includes Ref No. 20 & 21)
20	5021182	2	BEARING, Roller (1 per tire)
21	5021043	4	RETAINER, Bearing (2 per tire)
22	20784	1	Mower Seat
23	5025013X6	1	BOLT, 3/8-16 x 3/4
24	5041653	1	SPINDLE WASHER, Top
25	5025128	1	NUT, 3/8-16 Hex Serrated Flange
26	5041702B	2	YOKE, Caster
27	5041476	6	SPACER, 1.02 x 1.56 x .50
28	5021541	4	BUSHING, Flange
29	5020095	2	GREASE FITTING
30	5020655	2	PIN, Lynch

Footnotes

The above parts group applies to the following Mfg. Nos.:
5900228 (S/N: 1022 & Above) (P72)

© Copyright 2007 Briggs and Stratton. All Rights Reserved.

Electrical Schematic - Charging Circuit - Kohler

(S/N: 11581 & below)

094eskc0

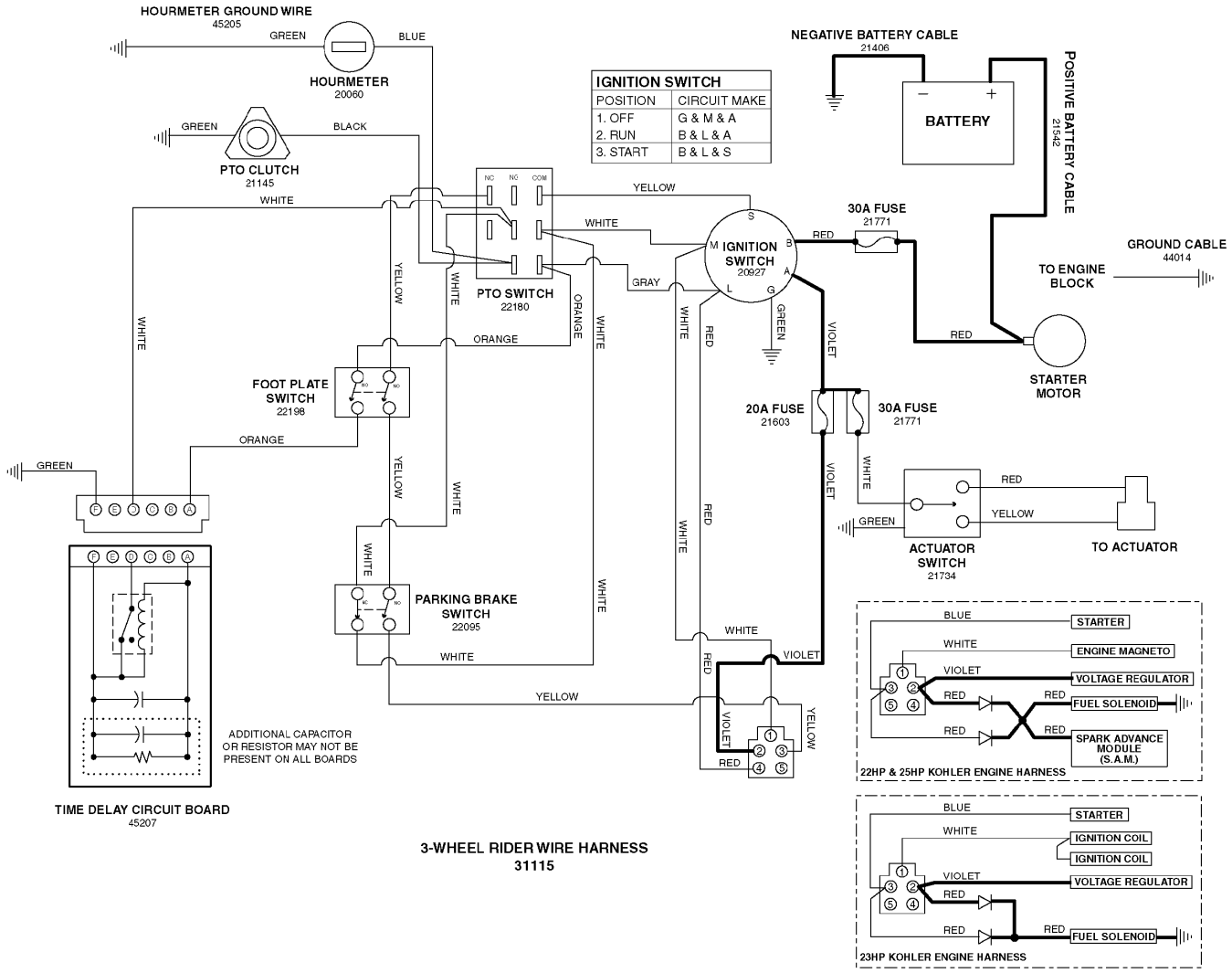

The above parts group applies to the following Mfg. Nos.:

5901035 (S/N: 1023 & Above) (H3225K)

5901036 (H3227K)

© Copyright 2007 Briggs and Stratton. All Rights Reserved.

Electrical Schematic - Cranking Circuit - Kohler

(S/N: 11581 & below)

094eskr0

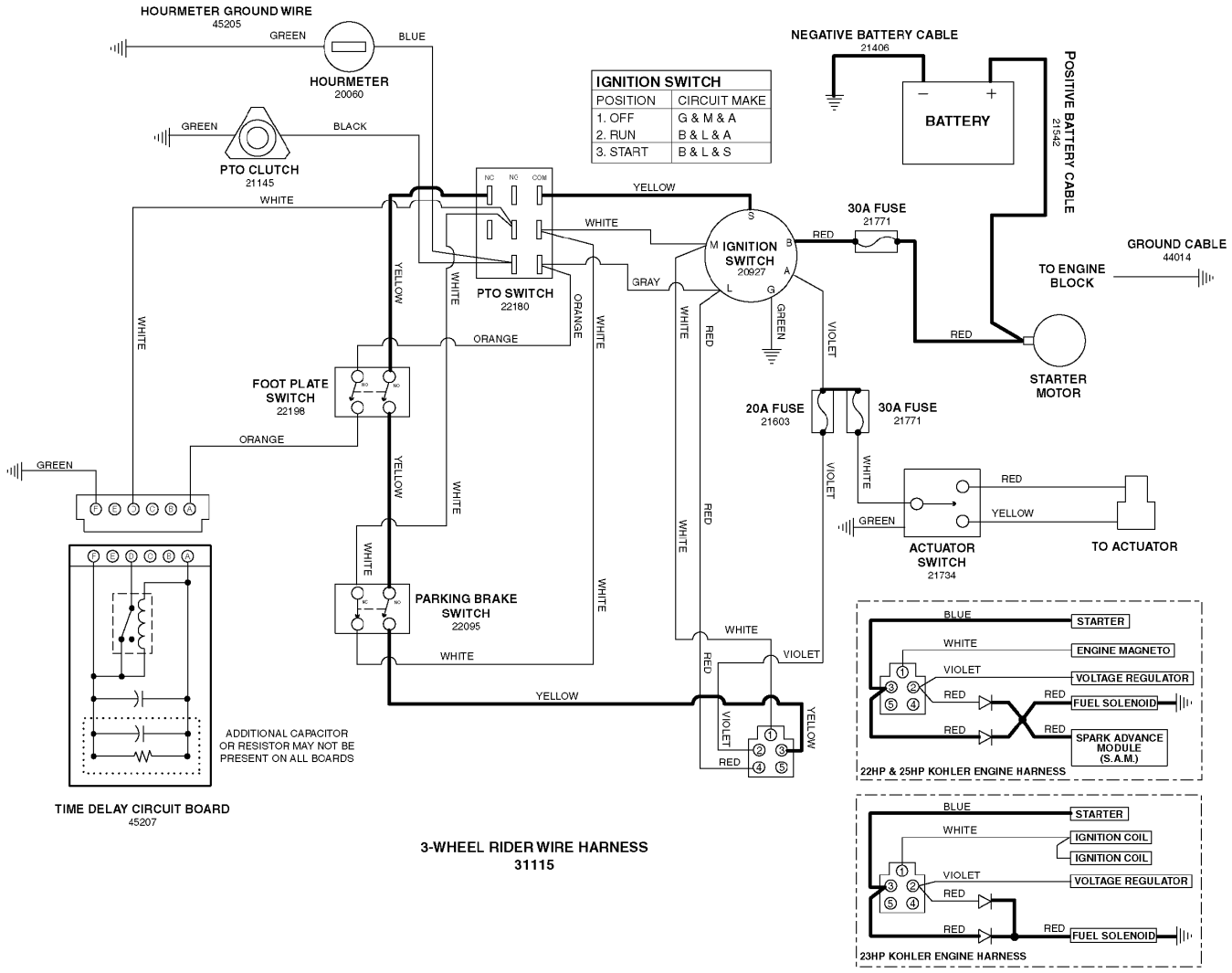

The above parts group applies to the following Mfg. Nos.:

5901035 (S/N: 1023 & Above) (H3225K)

5901036 (H3227K)

© Copyright 2007 Briggs and Stratton. All Rights Reserved.

Electrical Schematic - Operator Presence/Safety Circuit - Kohler

(S/N: 11581 & below)

094eski0

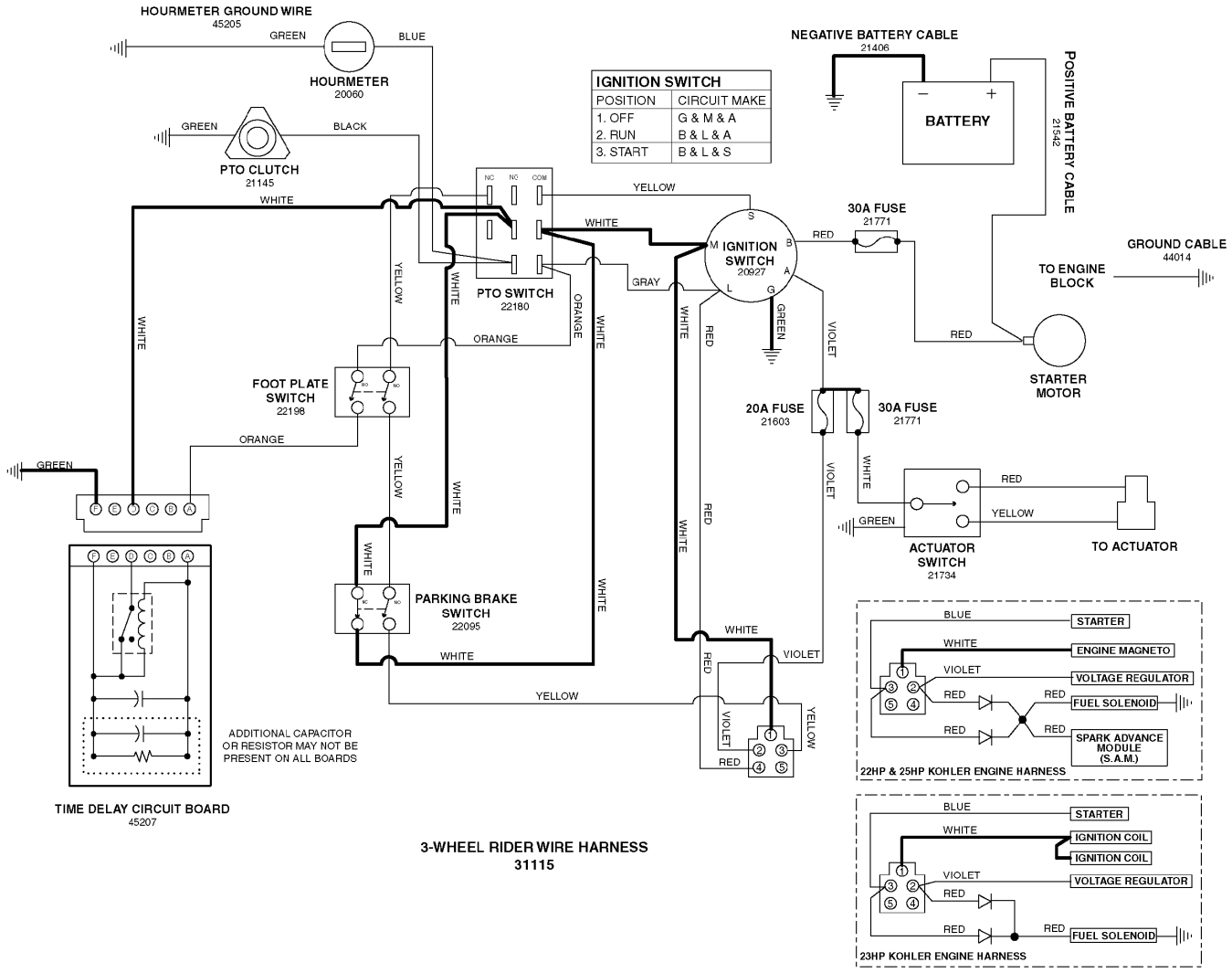

The above parts group applies to the following Mfg. Nos.:

5901035 (S/N: 1023 & Above) (H3225K)

5901036 (H3227K)

© Copyright 2007 Briggs and Stratton. All Rights Reserved.

Electrical Schematic - PTO Clutch Circuit - Kohler

(S/N: 11581 & below)

094eskp0

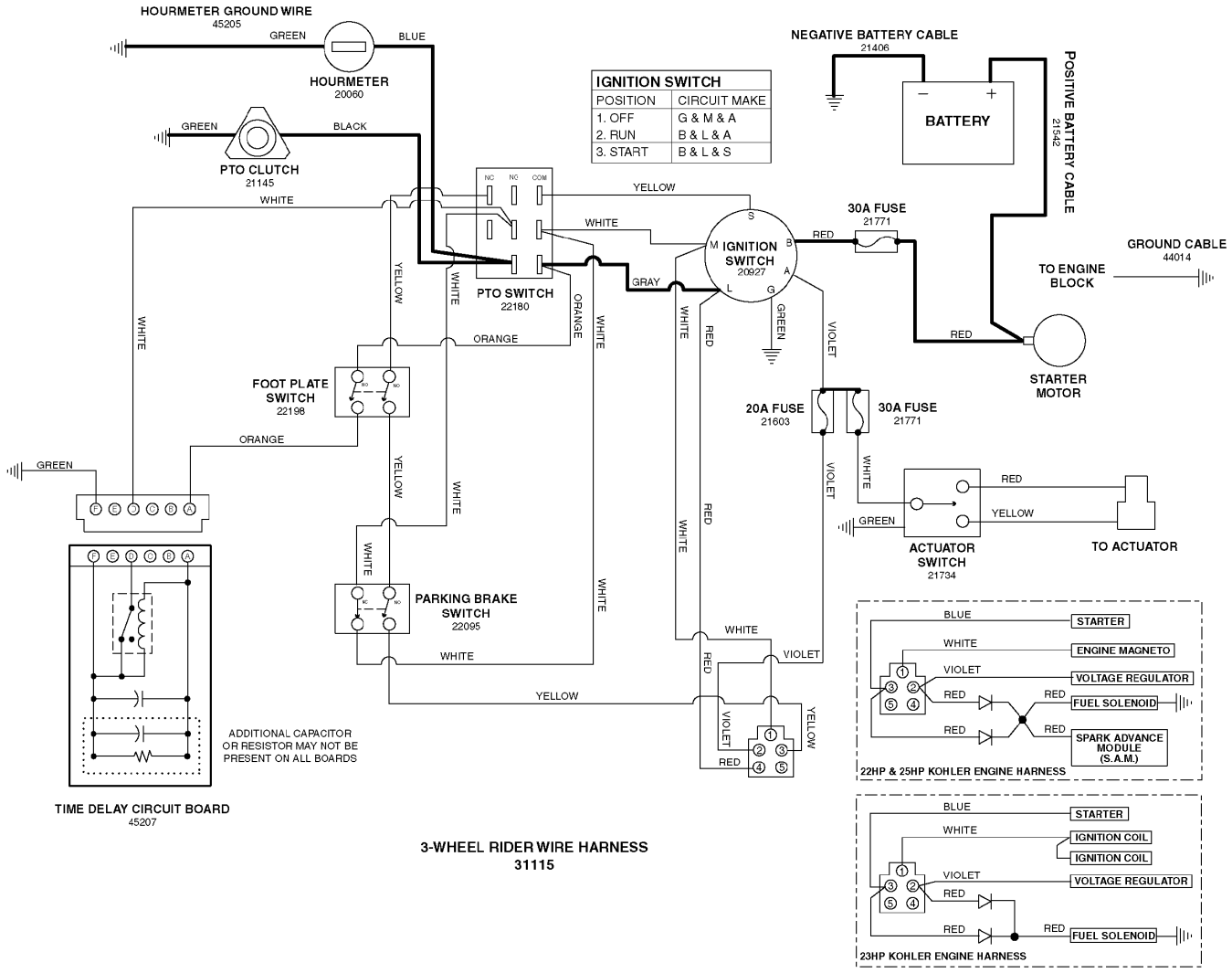

The above parts group applies to the following Mfg. Nos.:

5901035 (S/N: 1023 & Above) (H3225K)

5901036 (H3227K)

© Copyright 2007 Briggs and Stratton. All Rights Reserved.

Electrical Schematic - Charging Circuit - Kohler

(S/N: 11582 & above)

094eskc1

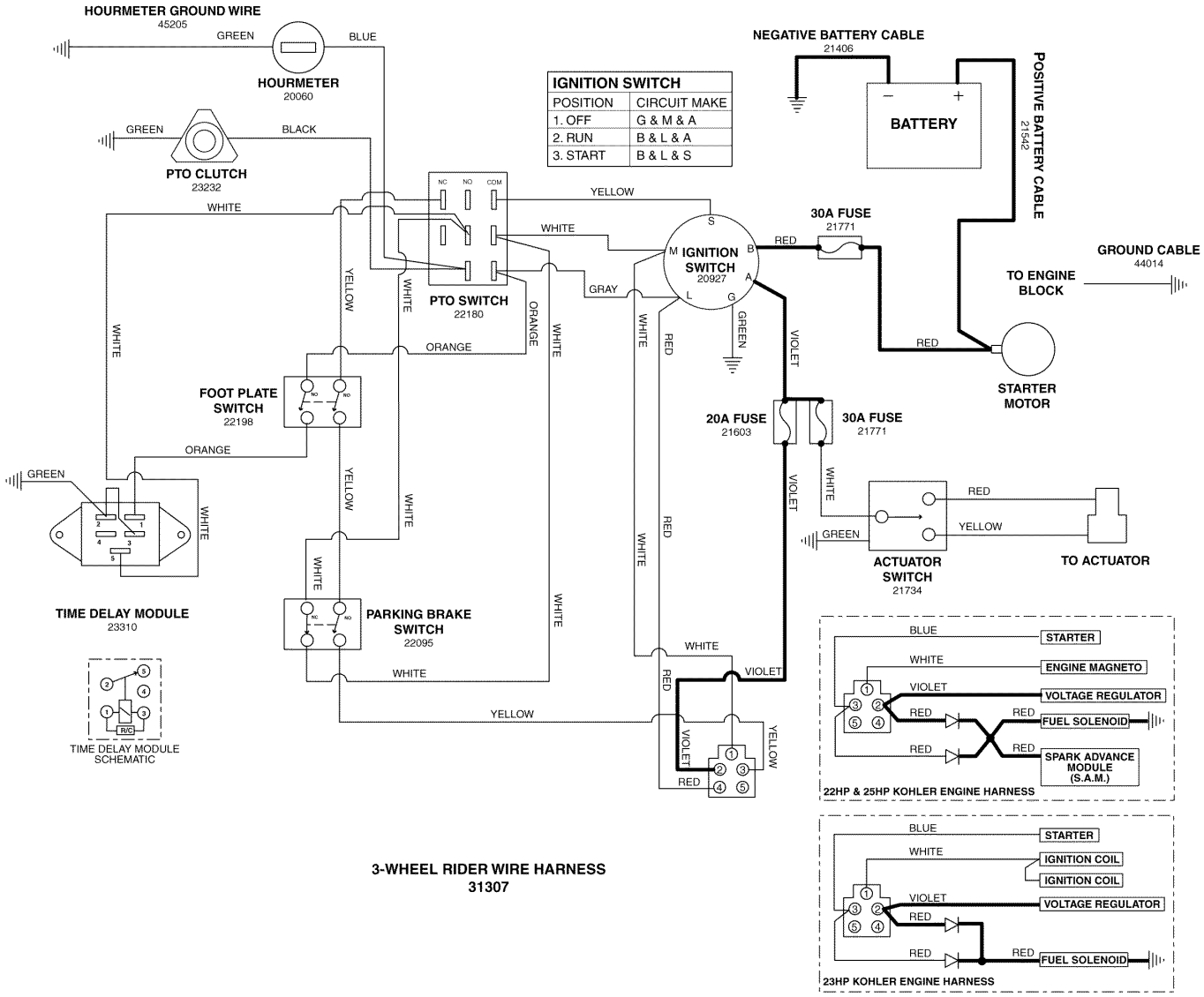

The above parts group applies to the following Mfg. Nos.:

5901035 (S/N: 1023 & Above) (H3225K)

5901036 (H3227K)

© Copyright 2007 Briggs and Stratton. All Rights Reserved.

Electrical Schematic - Cranking Circuit - Kohler

(S/N: 11582 & above)

094eskr1

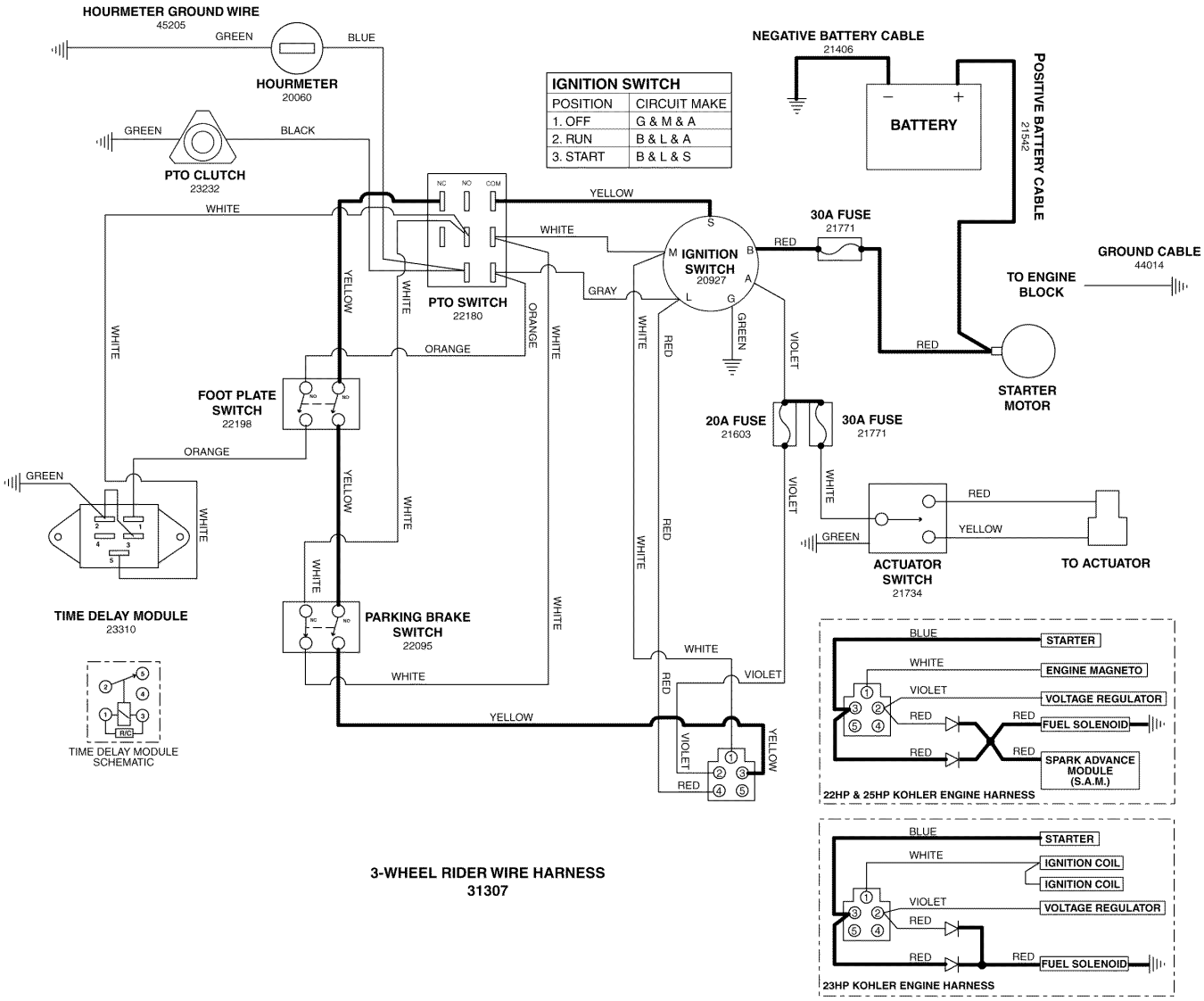

The above parts group applies to the following Mfg. Nos.:

5901035 (S/N: 1023 & Above) (H3225K)

5901036 (H3227K)

© Copyright 2007 Briggs and Stratton. All Rights Reserved.

Electrical Schematic - Operator Presence/Safety Circuit - Kohler

(S/N: 11582 & above)

094eski1

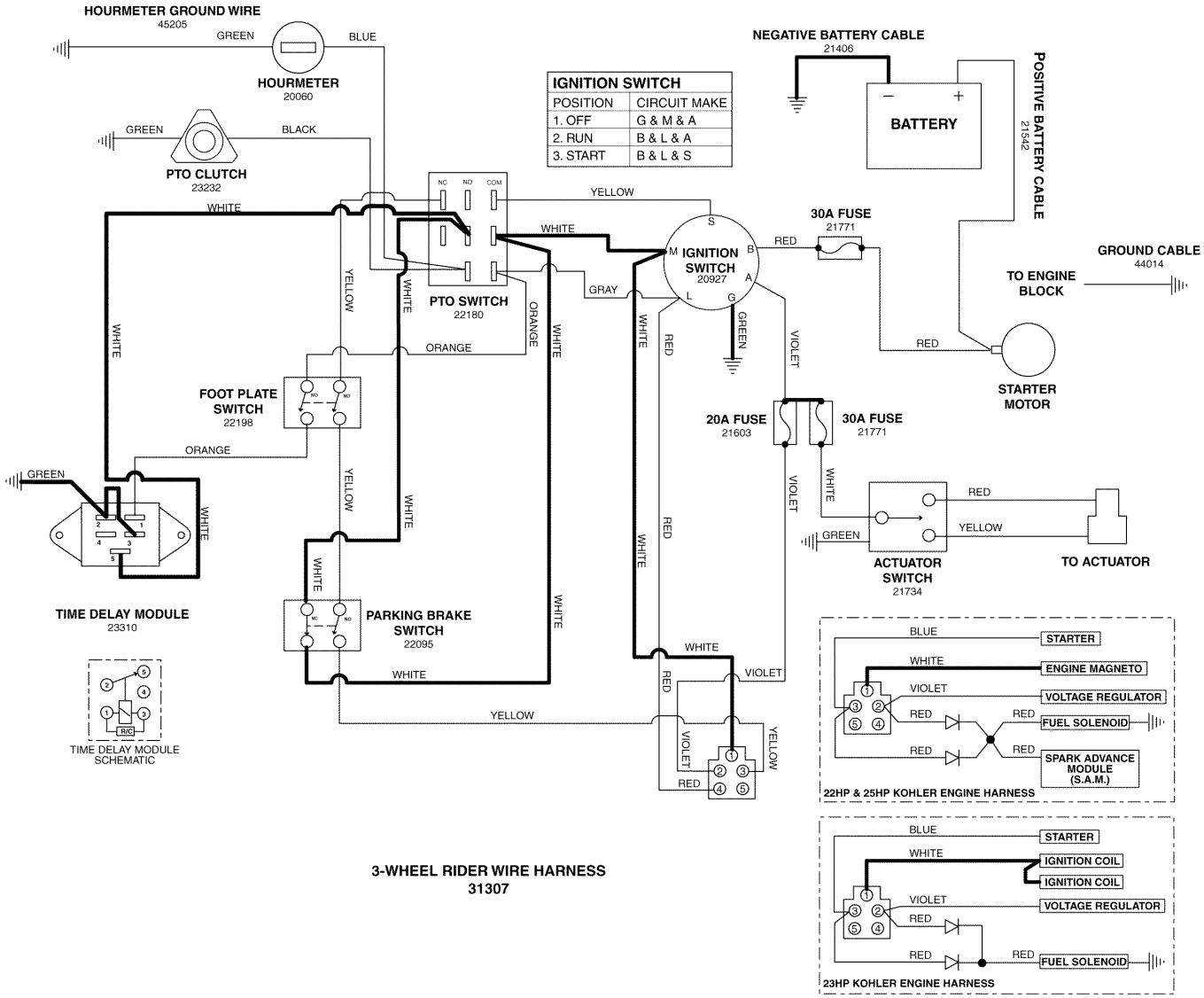

The above parts group applies to the following Mfg. Nos.:

5901035 (S/N: 1023 & Above) (H3225K)

5901036 (H3227K)

© Copyright 2007 Briggs and Stratton. All Rights Reserved.

Electrical Schematic - PTO Clutch Circuit - Kohler

(S/N: 11582 & above)

094eskp1

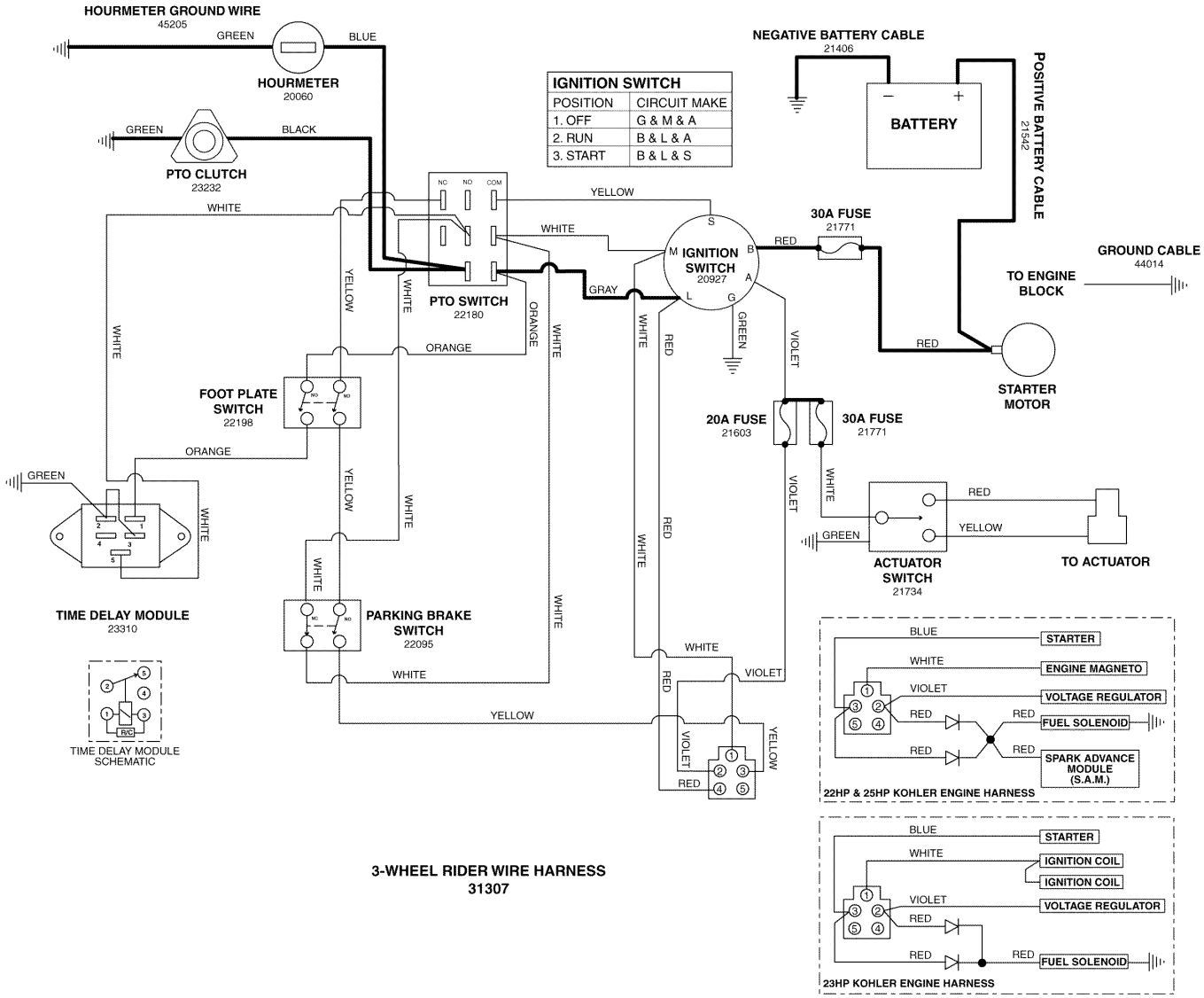

The above parts group applies to the following Mfg. Nos.:

5901035 (S/N: 1023 & Above) (H3225K)

5901036 (H3227K)

© Copyright 2007 Briggs and Stratton. All Rights Reserved.

Hardware Identification & Torque Specifications

Common Hardware Types

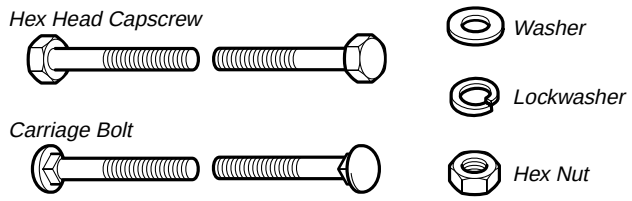

Standard Hardware Sizing

When a washer or nut is identified as **1/2"**, this is the *Nominal size*, meaning the *inside diameter* is 1/2 inch; if a second number is present it represent the *threads per inch*

When bolt or capscrew is identified as **1/2 - 16 x 2"**, this means the *Nominal size*, or *body diameter* is 1/2 inch; the second number represents the *threads per inch* (16 in this example, and the final number is the *body length* of the bolt or screw (in this example 2 inches long).

The guides and ruler furnished below are designed to help you select the appropriate hardware and tools.

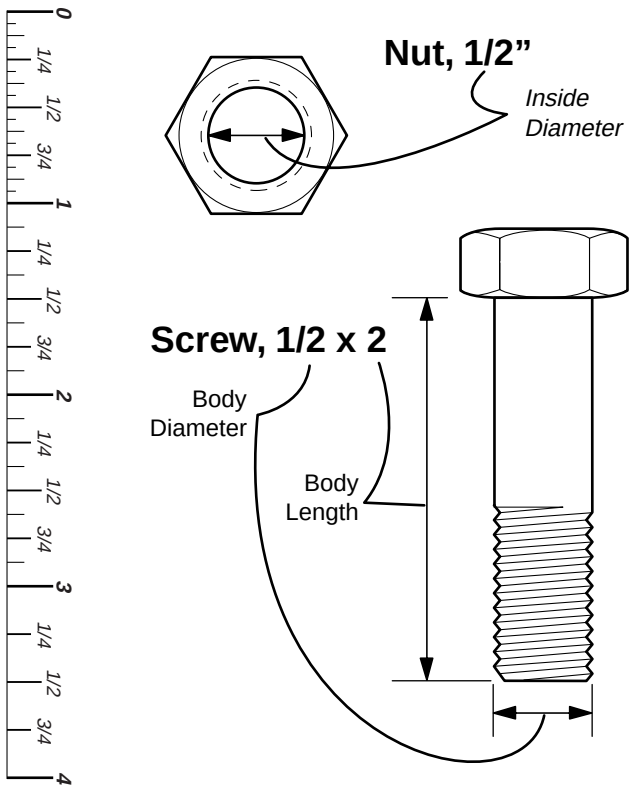

Torque Specification Chart

FOR STANDARD MACHINE HARDWARE (Tolerance ± 20%)

Hardware Grade	No Marks SAE Grade 2		SAE Grade 5		SAE Grade 8	
Size Of Hardware	*in/lbs* **ft/lbs**	Nm.	*in/lbs* **ft/lbs**	Nm.	**in/lbs** **ft/lbs**	Nm.
8-32	*19*	2.1	*30*	3.4	*41*	4.6
8-36	*20*	2.3	*31*	3.5	*43*	4.9
10-24	*27*	3.1	*43*	4.9	*60*	6.8
10-32	*31*	3.5	*49*	5.5	*68*	7.7
1/4-20	*66*	7.6	**8**	10.9	**12**	16.3
1/4-28	*76*	8.6	**10**	13.6	**14**	19.0
5/16-18	**11**	15.0	**17**	23.1	**25**	34.0
5/16-24	**12**	16.3	**19**	25.8	**27**	34.0
3/8-16	**20**	27.2	**30**	40.8	**45**	61.2
3/8-24	**23**	31.3	**35**	47.6	**50**	68.0
7/16-14	**30**	40.8	**50**	68.0	**70**	95.2
7/16-20	**35**	47.6	**55**	74.8	**80**	108.8
1/2-13	**50**	68.0	**75**	102.0	**110**	149.6
1/2-20	**55**	74.8	**90**	122.4	**120**	163.2
9/16-12	**65**	88.4	**110**	149.6	**150**	204.0
9/16-18	**75**	102.0	**120**	163.2	**170**	231.2
5/8-11	**90**	122.4	**150**	204.0	**220**	299.2
5/8-18	**100**	136	**180**	244.8	**240**	326.4
3/4-10	**160**	217.6	**260**	353.6	**386**	525.0
3/4-16	**180**	244.8	**300**	408.0	**420**	571.2
7/8-9	**140**	190.4	**400**	544.0	**600**	816.0
7/8-14	**155**	210.8	**440**	598.4	**660**	897.6
1-8	**220**	299.2	**580**	788.8	**900**	1,244.0
1-12	**240**	326.4	**640**	870.4	**1,000**	1,360.0

NOTES

1. These torque values are to be used for all hardware excluding: locknuts, self-tapping screws, thread forming screws, sheet metal screws and socket head setscrews.
2. Recommended seating torque values for locknuts:
   a. for prevailing torque locknuts - use 65% of grade 5 torques.
   b. for flange whizlock nuts and screws - use 135% of grade 5 torques.
3. Unless otherwise noted on assembly drawings, all torque values must meet this specification.

Wrench & Fastener Size Guide

1/4" Bolt or Nut
Wrench—7/16"

5/16" Bolt or Nut
Wrench—1/2"

3/8" Bolt or Nut
Wrench—9/16"

7/16" Bolt or Nut
Wrench (Bolt)—5/8"
Wrench (Nut)—11/16"

1/2" Bolt or Nut
Wrench—3/4"

Parts Manual

ProCut 30 Series

3-Wheel Riding Mower

S/N: 1023 & Above

IT IS THE POLICY OF FERRIS INDUSTRIES TO IMPROVE ITS PRODUCTS WHENEVER IT IS POSSIBLE AND PRACTICAL TO DO SO. WE RESERVE THE RIGHT TO MAKE CHANGES OR ADD IMPROVEMENTS AT ANY TIME WITHOUT INCURRING ANY OBLIGATION TO MAKE SUCH CHANGES ON PRODUCTS MANUFACTURED

Briggs and Stratton Yard Power Products Group
5375 North Main Street
Munnsville, NY 13409 USA
800-933-6175

www.ferrisindustries.com

© Copyright 2007 Briggs and Stratton Corporation
All Rights Reserved. Printed In USA.