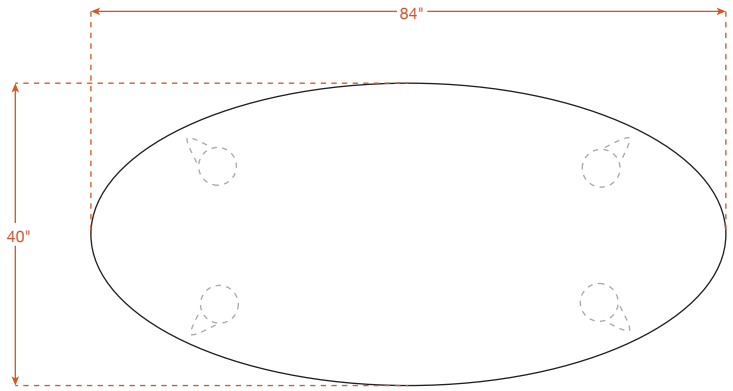

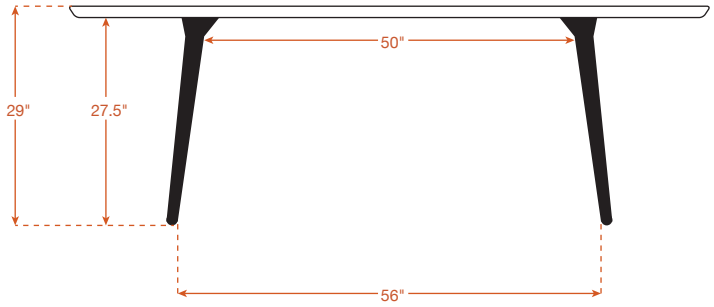

medley

Voya Oval Dining Table