Memoria

Description	Memoria Basin Mixer, Single-Lever
Code	A42329VUK
Product Properties	Extra Water Saving
Water Label	A
Coating	Chrome
Cartridge	35 mm Cartridge Flow and Temperature Adjustable
Aerator	Cache Silicone Aerator
Colour	Chrome

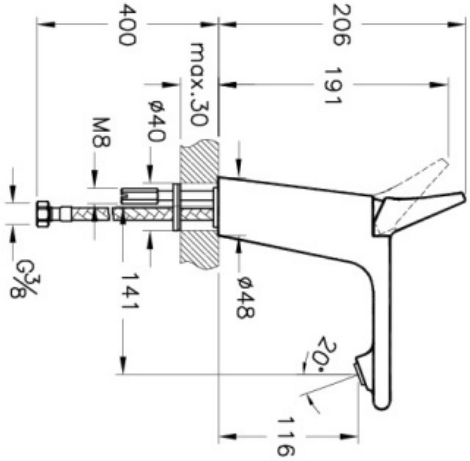

VitrA retains the right to change details about the products and technical specifications without prior notice.