TECHNICAL DRAWING

COLLECTION: SENSE
PRODUCT CODE: SEN-135/NS-C/P

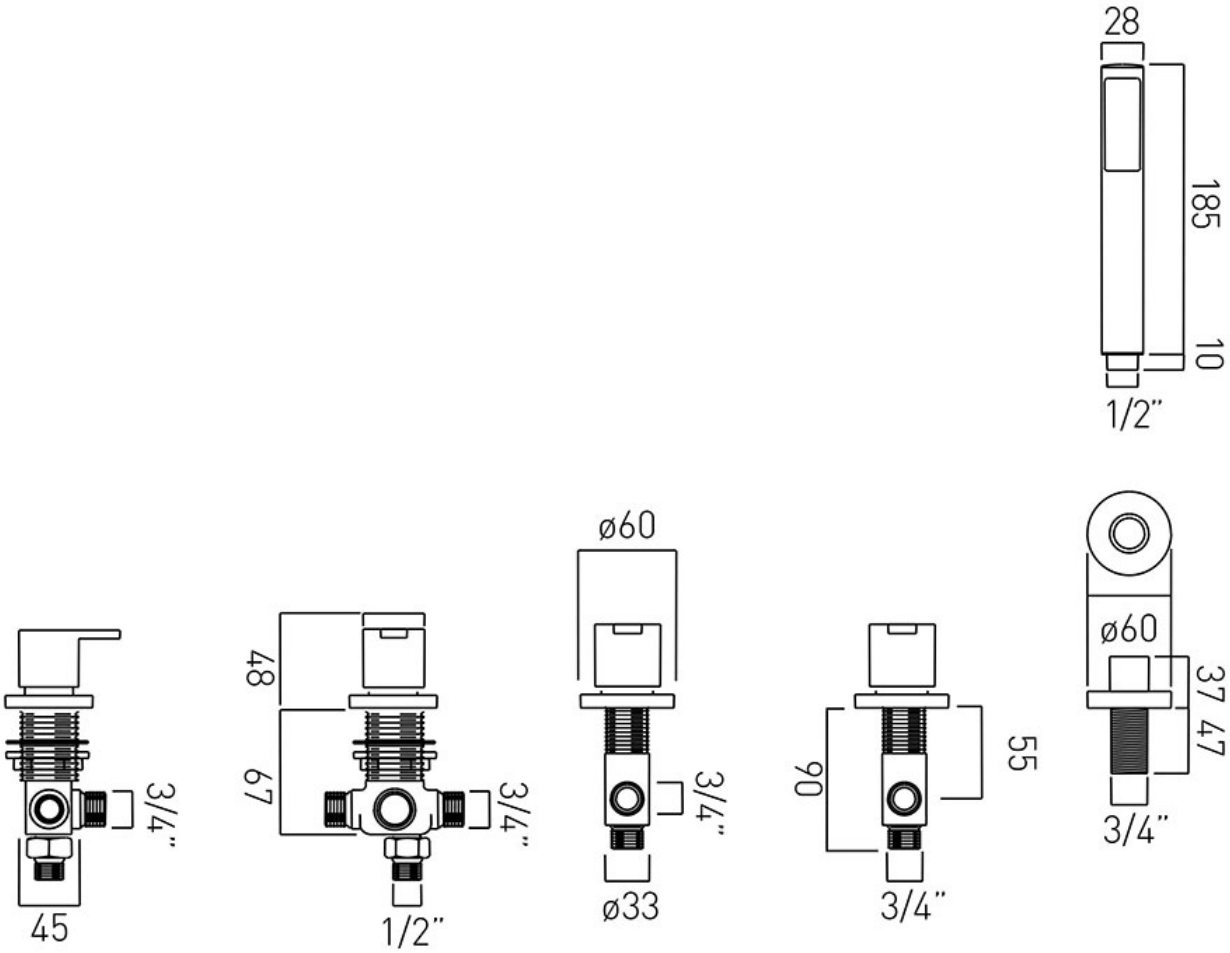

tel: 01934 744466
email: sales@vado.com
www.vado.com

where inspiration flows
taps | showering | accessories

VADO