TEMPESTA COSMOPOLITAN SYSTEM 210

Shower system with single lever for wall mounting

MODEL # 26224001

Pure Freude an Wasser

GROHE

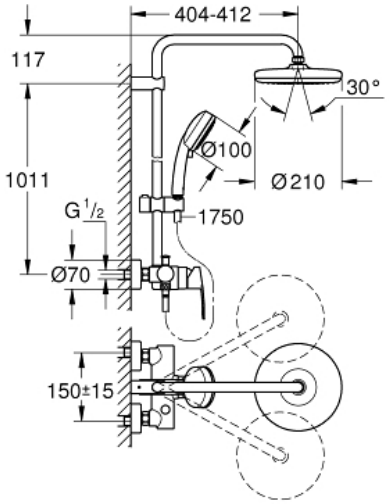

Product Description:
TEMPESTA COSMOPOLITAN SYSTEM 210
Shower system with single lever for wall mounting

Standard Specification:
Consisting of:
horizontal swivable 390 mm projection shower arm
exposed single-lever shower mixer
with diverter
allows change between:
head shower Tempesta 210 (26 408)
Rain spray pattern
with ball joint
rotation angle ± 15°
hand shower New Tempesta Cosmopolitan 100 (27 571 001)
2 spray patterns:
Rain, Jet
adjustable height via gliding element
Rotaflex shower hose 1750 mm 1/2" x 1/2" (28 410)
GROHE SilkMove 46 mm ceramic cartridge
GROHE DreamSpray perfect spray pattern
GROHE StarLight chrome finish
SpeedClean anti-limescale system
Inner WaterGuide for a longer life
Twistfree preventing the hose from twisting
min.recommended pressure 1 bar
minimum flow rate 7 l/min.
min. recommended pressure 1 bar

Color:
❑ 26224001 Chrome