MINTA
Single-lever sink mixer 1/2"
MODEL # 32168000

Pure Freude an Wasser

GROHE

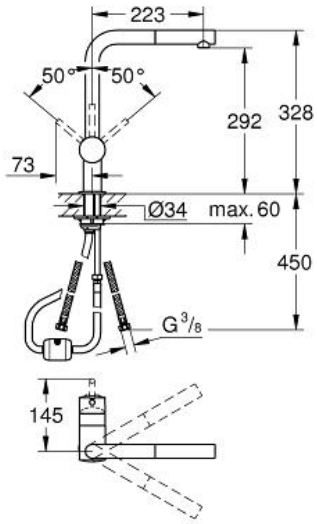

Product Description:
MINTA
Single-lever sink mixer 1/2"

Standard Specification:
monobloc installation
GROHE StarLight finish
GROHE SilkMove 46 mm ceramic cartridge
pull out mousseur spout
adjustable flow rate limiter
swivel tubular spout
integrated non-return valve
protected against backflow
flexible connection hoses
rapid installation system

Color:
❑ 32168000 Chrome