Flush valve for WC

MODEL # 37157000

Pure Freude an Wasser

GROHE

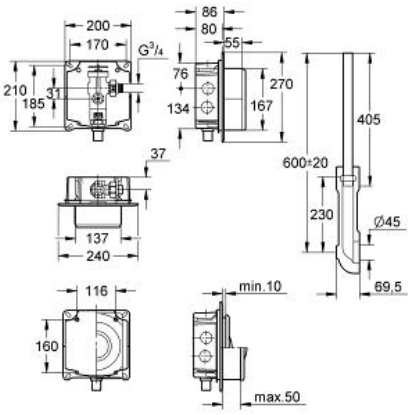

Product Description:

Flush valve for WC

Standard Specification:
concealed installation
¾"
stop valve
6 - 14 l adjustable
for **low pressure 12mm bore**
for wash-down and wash-out bowls
flow pressure range from 0.6 - 3.0 bar
(min. static pressure 1.5 bar)
with flow rate adjustment
box for concealed installation with
flush elbow
flush pipe adjustable in length
without wall plate/actuation

Color:
❑ 37157000