EUPHORIA SYSTEM 210
with thermostat for wall mounting
MODEL # 26363000

Pure Freude an Wasser

GROHE

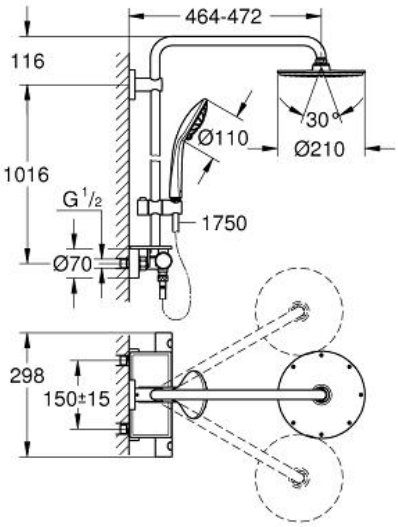

Product Description:
EUPHORIA SYSTEM 210
with thermostat for wall mounting

Standard Specification:
Consisting of:
horizontal swivable 450 mm projection shower arm
exposed thermostatic shower
with Aquadimmer function
allows change between:
metal head shower Rainshower Cosmopolitan 210 (28 368 000)
Rain spray pattern
with ball joint
rotation angle ± 15°
hand shower Euphoria 110 Massage
(27 221 000)
adjustable height via gliding element
Silverflex shower hose 1750 mm (28 388 000)
GROHE EasyReach tray (26 362 LN0)
minimum flow rate 7 l/min.
GROHE DreamSpray perfect spray pattern
GROHE StarLight chrome finish
GROHE TurboStat compact cartridge
with wax thermoelement
GROHE SafeStop safety button at 38°C
(calibration required)
GROHE SafeStop Plus optional temperature limiter at 43°C included
SpeedClean anti-limescale system
Inner WaterGuide for a longer life
Twistfree preventing the hose from twisting

Color:
❑ 26363000 Chrome