ROUND & SQUARE SHOWER KIT
INSTALLATION INSTRUCTIONS

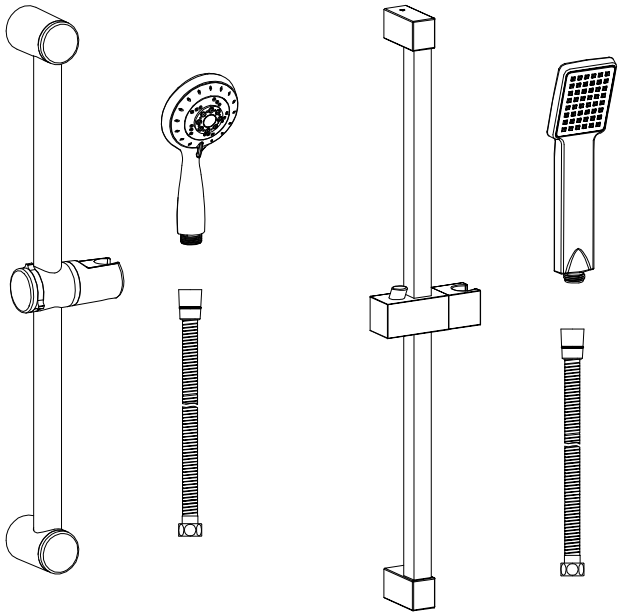

IMPORTANT

1.We recommend that this product is installed by a qualified, professional installer.
2.Please check the product immediately, to ensure that it has not been damaged, and is complete. Before installation, check that the product is the correct model and all parts required for installation and use are present
3.Please read these instructions carefully and retain for future reference.

COMPONENTS AND DIMENSION DRAWING

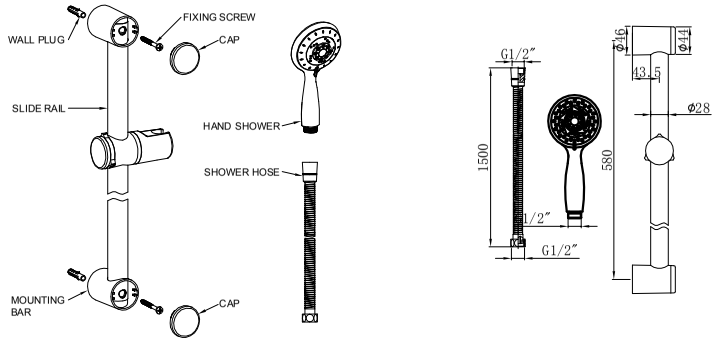

1.At each end of the slide rail, pull out the cover cap and drill a hole of ø8mm to a depth of 45mm in the wall.
2.Put the wall plugs into the holes. Mount the slide rail against the wall, with the screws inserted into the wall plugs. Cover the mounting bars with the caps.
3.Connect one end of the shower hose to the outlet of the shower valve, and the other end of the hose to the hand shower.

COMPONENTS AND DIMENSION DRAWING

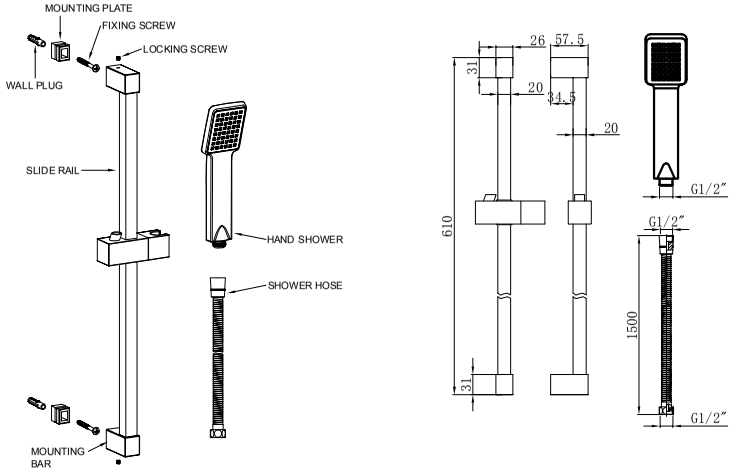

1.At each end of the slide rail, pull out the cover cap and drill a hole of ø8mm to a depth of 45mm in the wall.
2.Put wall plugs into the holes and fix the mounting plates against the wall with the fixing screws.
3.Mount the slide rail against the wall with the screws. Cover the mounting bars with the caps.
4.Connect one end of the shower hose to the outlet of the shower valve, and the other end of the hose to the hand shower.