Leven Top Inlet Slophopper In Stainless Steel

ILLUSTRATED

S6568	Leven slop hopper stainless steel, top inlet
B1684	Nimbus 21 bib tap extension 1/2" x 100mm pair
S4590	Cistern Conversion Kit - To 9 litre Flush
S3955	Clena cistern 6 litre single flush syphon, high level, side supply and internal overflow, chain with rubber pull (fittings are reversible)
S3584	P trap outlet, plastic for slop hoppers
S8270	(TB H1) Markwik ½" bib taps
B1686	Nimbus 21 concealed bib tap wall mountself centralising installation pair

OPTIONS

S9281	Leg 900mm stainless steel to floor (2 required)
S3585	S trap outlet, plastic for slop hoppers
B1688	Nimbus 21 exposed bib tap wall mountself centralising installation pair

ILLUSTRATED PRODUCT DETAILS

Weights

S6568	12.50 KG
S4590	0.00 KG
S3955	16.00 KG
S3584	0.26 KG
S8270	1.65 KG

Materials

S6568	Stainless Steel
B1684	Chrome Plated Brass
S4590	Plastic
S3955	Vitreous China
S3584	Plastic
S8270	Chrome Plated Brass
B1686	Chrome Plated Brass

Finishes

S6568	Stainless Steel finish (MY)
B1684	Chrome (AA)
S4590	Neutral / No Finish (67)
S3955	White (01)
S3584	White (01)
S8270	Chrome (AA)
B1686	Chrome (AA)

Capacity

S4590	9 litres
S3955	6 litres

Standards

Manufactured from 1.2mm 1.4301 (304) Stainless Steel sheet, conforms to BS EN 10088: Part 2: 2005

Special Notes

For the disposal of liquid and solid waste in connection with clinical procedures. HTM64 does not cover for the provision of leg supports to floor. Note 2.94 states that "Exposed services are visually unattractive, can be unhygienic and are difficult to clean and decorate. Indeed the additional cost of the latter over a number of years may well exceed any savings in intial capital costs"

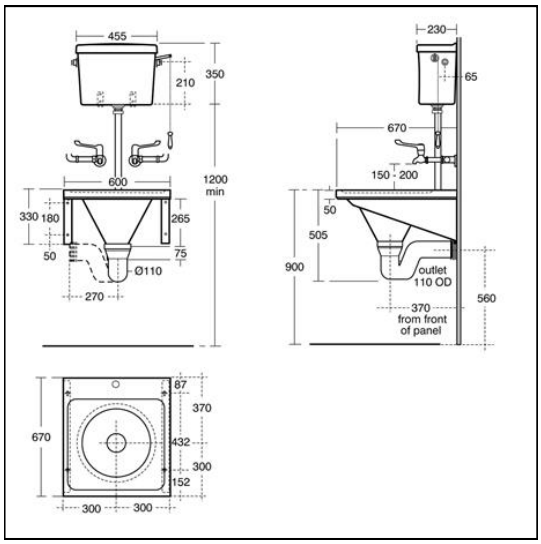

FEATURES

HTM HBN

Ideal Standard (UK) Ltd. makes every effort to ensure that the information provided on its website is accurate. However, we cannot guarantee this, and accept no liability for any information or advice given via its website.