RAK SHOWERING
Square | Shower Column | Exposed | Thermostatic

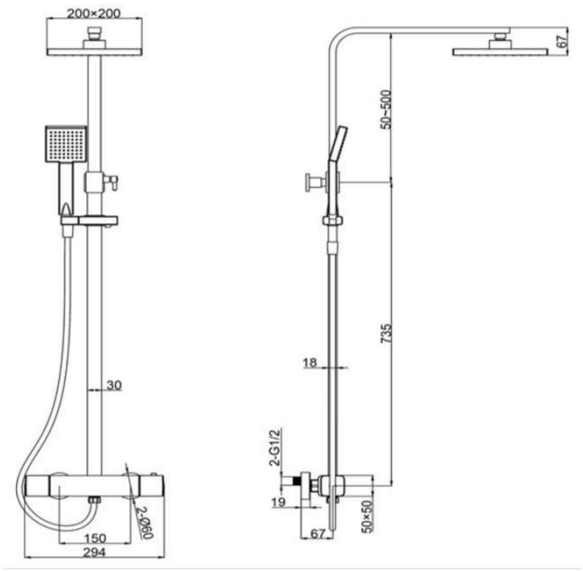

Dimensions:	294w x 0d x 735h mm
Colour:	CHROME
Code:	RAKSHW6012
Pressures:	0.5 BAR – 6.0 BAR
Warranty:	15 YEARS
Weight:	4.0 KG

Dimensions: All Dimensions in mm tolerance ± 5% for below 200mm and ± 3% for above 200mm.
Note: Due to a continuing development programme to improve design and performance the manufacturer reserves all rights to vary specifications without prior information.
Please note accessories are for photographic use only.