Technical Data Sheet

Camden 1700 x 700 x 380mm Single Ended Bath
EB501

TECHNICAL SPECIFICATION

EB501 Camden Single Ended Bath
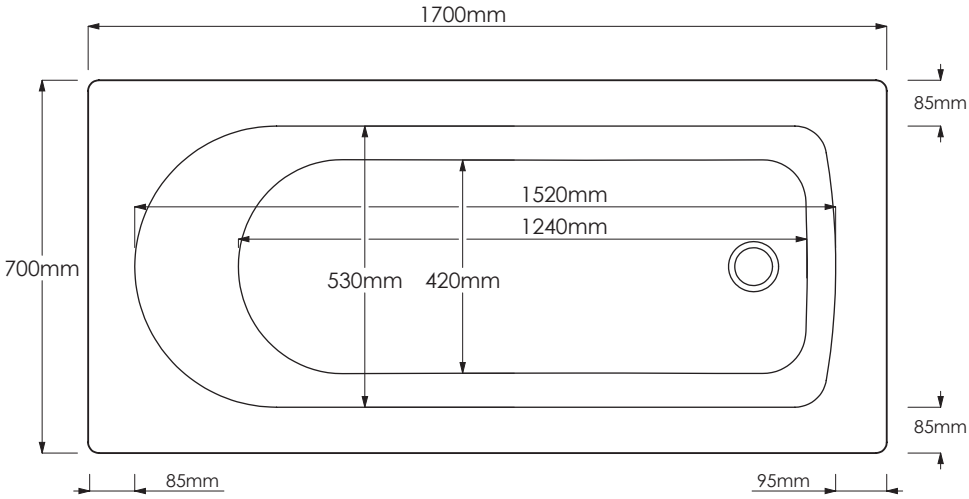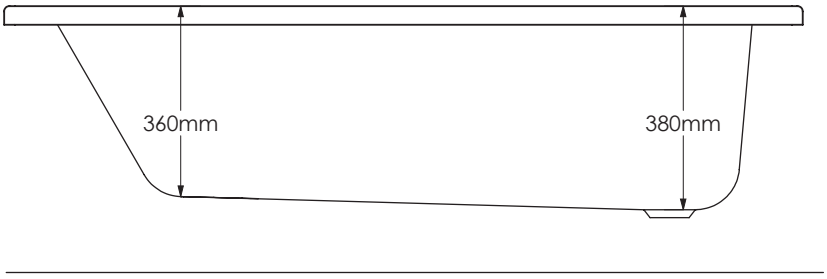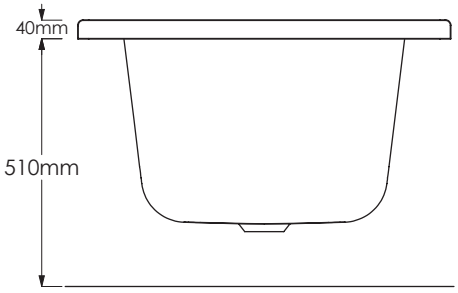
SIZE	1700 x 700 x 380 mm
CAPACITY	179L
TAP HOLES	No tap holes
BASEBOARD	Encapsulated baseboard
MATERIAL	Timber Rim Reinforcement
LEG SET	Tubular Leg Set