AXOR

hansgrohe

Talis Select M51
Single lever kitchen mixer 300 with pull-out spout, single spray mode
Surfaces: **chrome** Art. no. : **72821000**

Description

product features

- ComfortZone 300 provides space for greater freedom of movement
- Swivel spout adjustable in 2 steps to 110° or 150°
- normal spray
- Select button for a comfortable start/stop of the water flow
- MagFit magnetic shower support
- Maximum flow rate (at 3 bar): 8 l/min
- ceramic cartridge
- ⅜" hose connections
- integrated non-return valve

Article Details

Price excl. VAT £ 454.17

Technology

Select · Air Power · Quick Clean · Comfort Zone

Certificates

kiwa

Product image

Scale drawing

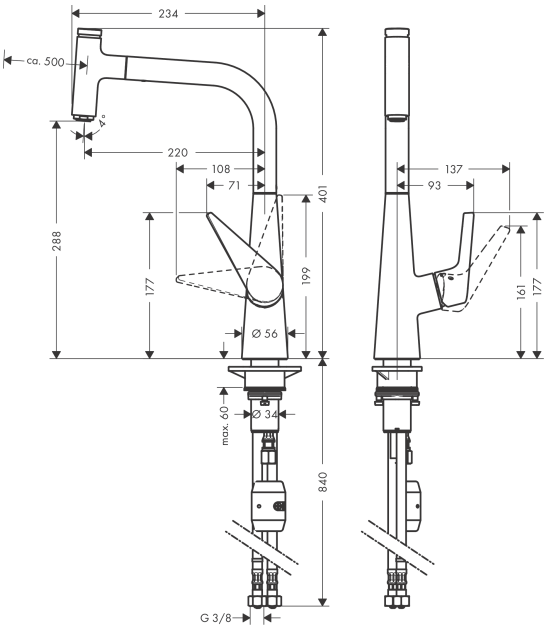
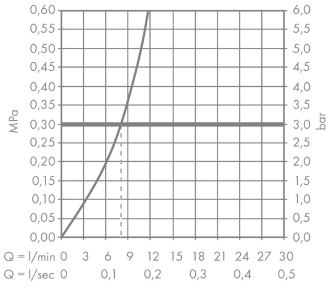
Flowchart