Name	V-Care Prime Wall-Hung WC
Collection	V-Care Prime
Colour	White
Designer	Arik Levy
Size	54 cm
Soft close	Soft Close
Flush Type	Dual

Product Code: 7231B403-6216

Description

Wall-Hung, White, 54 cm, Rim-ex

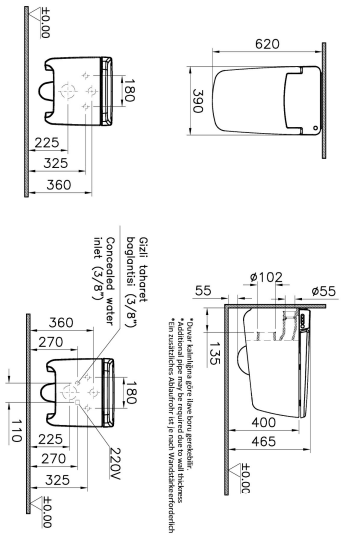

VitrA reserves the right to make changes in products and technical details without prior notice.
All drawings contain the necessary measurements which are subject to standard tolerances. For exact measurements, in particular for customized installation scenarios, it can only be taken from the finished ceramic product.