AXOR

hansgrohe

Talis Select S
Basin mixer 80 without waste
Surfaces: **chrome** Art. no. : **72041000**

Description

product features

- ComfortZone 80 provides space for greater freedom of movement
- free-standing installation
- spout 97 mm long
- normal spray
- Flow rate (at 3 bar): 5 l/min
- Min. operating pressure: 1 bar
- Max. operating pressure: 10 bar
- Select Cartridge with temperature control
- QuickClean technology for easy limescale removal
- if running with a pump, please specify a universal (negative head) pump
- WRAS 1612014
- WRAS 1612014
- WRAS 1612014

Article Details

Price excl. VAT £ 171.67

Technology

Select · Air Power · Eco Smart · Quick Clean · Comfort Zone

Certificates

WRAS APPROVED PRODUCT

Product image

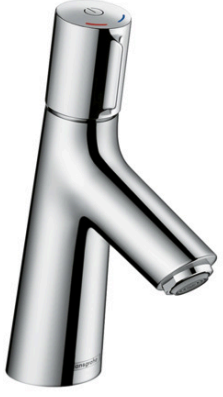

Scale drawing

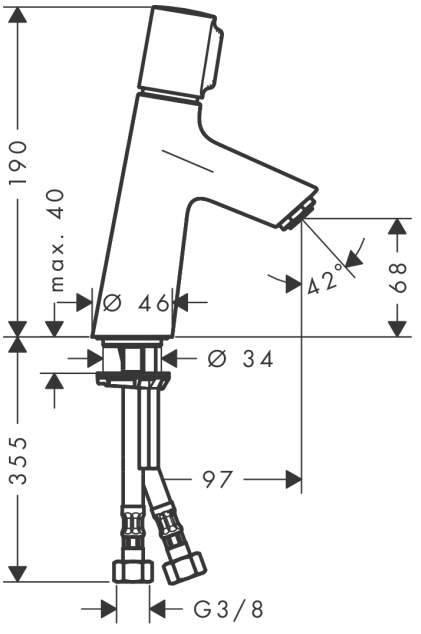

Talis Select S
Basin mixer 80 without waste
Surfaces: **chrome** Art. no. : **72041000**
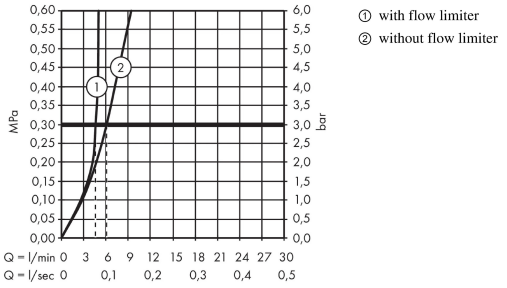
Flowchart