AXOR

hansgrohe

Focus M42
Single lever kitchen mixer 220, single spray mode
Surfaces: **stainless steel finish** Art. no. : **71802800**

Description

product features

- ComfortZone 220 provides space for greater freedom of movement
- Swivel spout 360°
- normal spray
- Maximum flow rate (at 3 bar): 10 l/min
- Operating pressure: min. 1 bar/max. 10 bar
- ceramic cartridge
- ⅜" hose connections
- WRAS 1901311
- WRAS 1901311
- KIWA UK 1901718

Article Details

Price excl. VAT £ 229.17

Technology

Air Power · Quick Clean · Comfort Zone

Certificates

kiwa · WRAS APPROVED PRODUCT

Product image

Scale drawing

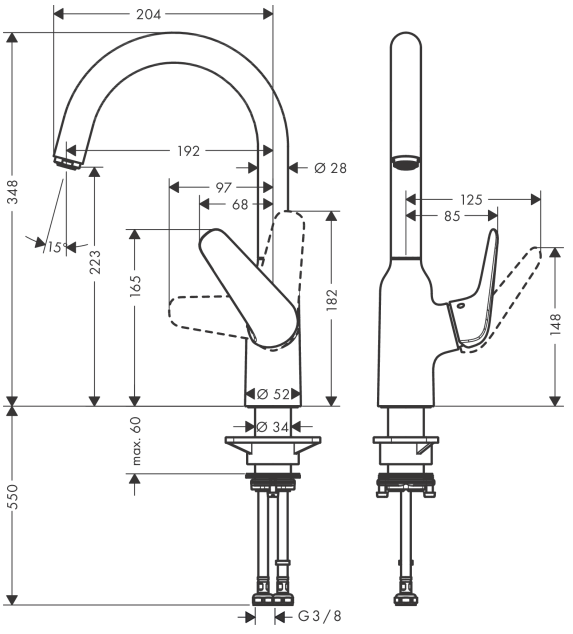

Flowchart