Nest Trendy

Name	Nest Trendy Mirror
Colour	Anthracite
Award	Good Design
Designer	Pentagon Design
Assembly	Wall-Hung
Segments	Middle
Guarantee	2 Years
Lighting type	Led Lighting
Lighting	Yes
Finish-Body	Thermoform
Light Operation Type	Touch Sensor
Mounting	Fully Assembled
Width	80 cm
Depth	4 cm

Product Code: 56162

Description

80 cm, Anthracite

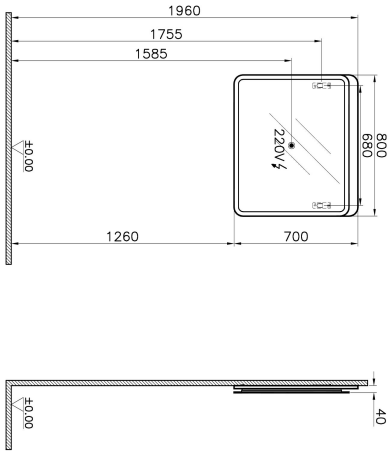

VitrA reserves the right to make changes in products and technical details without prior notice.
All drawings contain the necessary measurements which are subject to standard tolerances. For exact measurements, in particular for customized installation scenarios, it can only be taken from the finished ceramic product.