AXOR

hansgrohe

Metropol
4-hole rim-mounted bath mixer with lever handle
Surfaces: **chrome** Art. no. : **32553000**

Description

product features

- Consists of: 4-hole rim-mounted bath mixer, hand shower, shower holder
- spout 197 mm long
- designed to run 2 outlets
- Connection type: basic set
- Spray type mixer: normal spray
- Spray type hand shower: Rain, RainAir, Whirl
- Maximum pull-out length of hand shower: 1.60 m
- Flow rate (at 3 bar): 22 l/min
- ceramic shut-off cartridges hot/cold 90°
- Min. operating pressure: 1 bar
- Max. operating pressure: 10 bar

Article Details

Price excl. VAT £ 529.17

Technology

Product image

Scale drawing

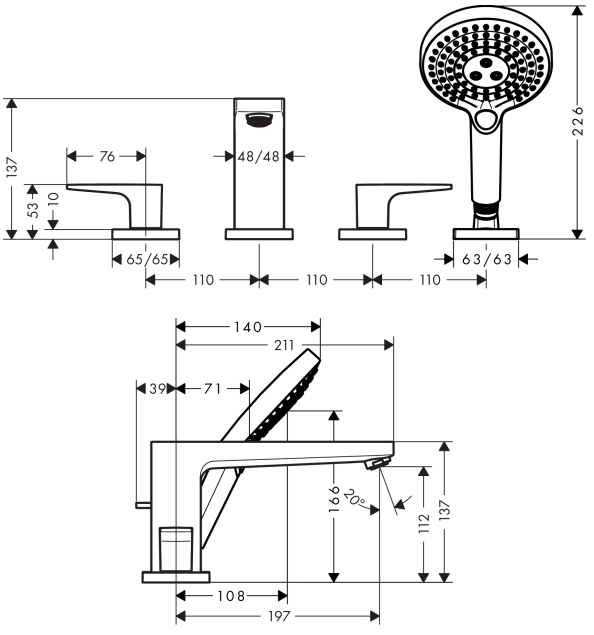
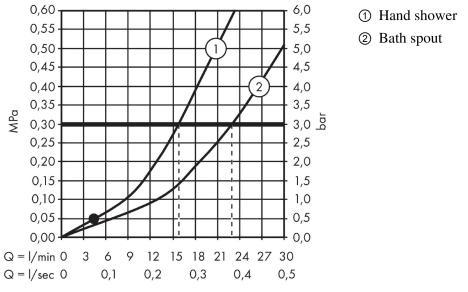
Flowchart