AXOR

hansgrohe

Focus M41
Single lever kitchen mixer 280, single spray mode
Surfaces: **matt black** Art. no. : **31817670**

Description

product features

- ComfortZone 280 provides space for greater freedom of movement
- Swivel spout can be adjusted in 3 steps 110°, 150° or 360°
- handle can be positioned on the right or left
- normal spray
- Maximum flow rate (at 3 bar): 12 l/min
- ceramic cartridge
- ⅜" hose connections
- WRAS 1804104

Article Details

Price excl. VAT	£ 315.00

Technology

Air Power

Comfort Zone

Certificates

WRAS APPROVED PRODUCT

kiwa

Product image

Scale drawing

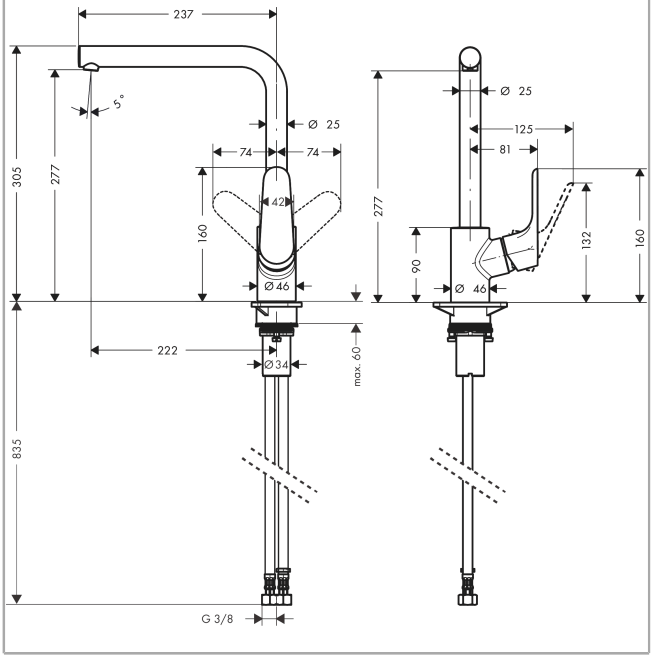
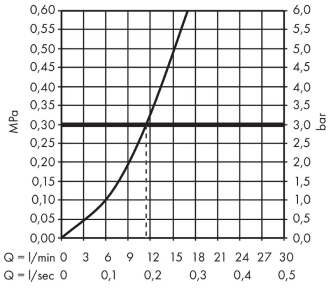
Flowchart