AXOR

hansgrohe

Raindance Select S
Shower system with ShowerSelect S thermostatic mixer for concealed installation
Surfaces: **chrome** Art. no. : **27297000**

Description

product features

- Consists of: overhead shower, hand shower, thermostatic shower mixer, basic set, shower arm, shower holder, wall outlet, shower hose
- Maximum flow rate (at 3 bar): 17 l/min
- overhead shower size: 240 mm
- shower arm length: 390 mm
- spray pattern overhead shower: RainAir, Rain
- spray pattern hand shower: RainAir, Rain, WhirlAir
- hand shower size: 125 mm
- kink-protected shower hose
- thermostatic mixer with Select push button on / off control for 2 outlets
- safety stop at 40°C
- if running with a pump, please specify a universal (negative head) pump
- Operating pressure: min. 1 bar/max. 6 bar

Article Details

Price excl. VAT	£ 1,141.67

Product image
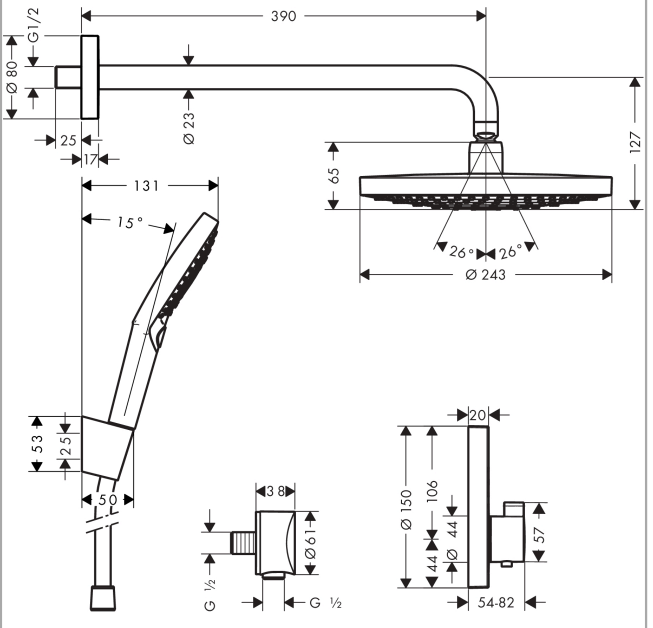
Scale drawing