ZEUS F722 FC

3-6S SUPPORT COMPASS

Basic parameters

Product Name: ZEUS F722 FC
Betaflight firmware: HGLRC F722
CPU: STM32F722 RET6
Input voltage: 3-6S Lipo
BEC output: 9V / 1.5A / 5V / 2A
Gyroscope: BMI270
Barometer: DPS310
Size: 37.3 x 37.3 mm
Mounting hole: 30.5*30.5mm.M3
Black Box: 16M
Ports: 5
Weight: 9.5g

Port recommended:
UARTS1: Receiver
UARTS2: GPS
UARTS3: VTX
UARTS4: DJI
UARTS5: ESC

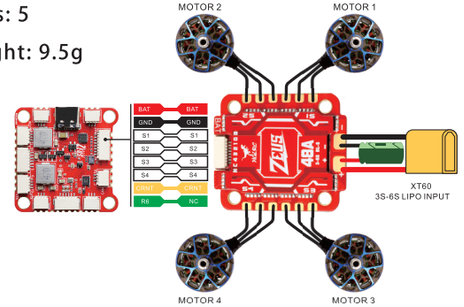

Pad wiring diagram

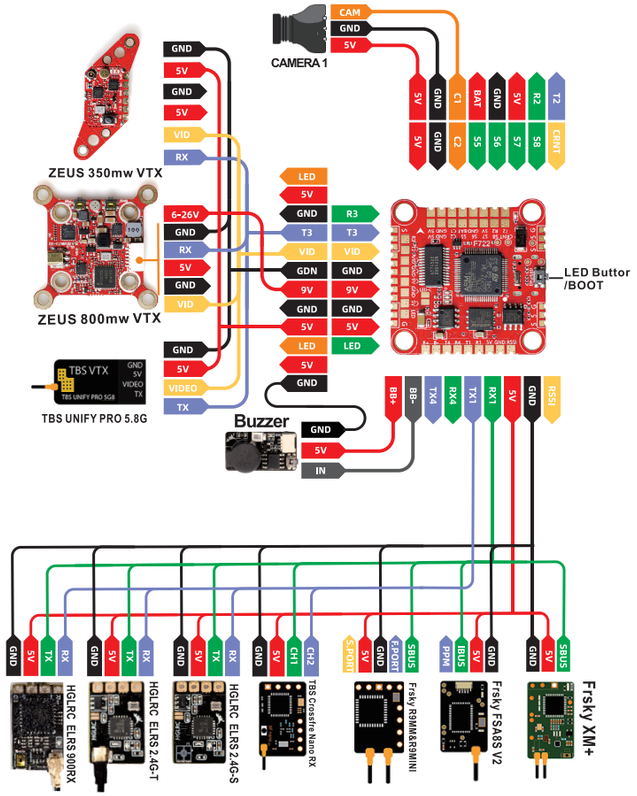

Socket wiring diagram

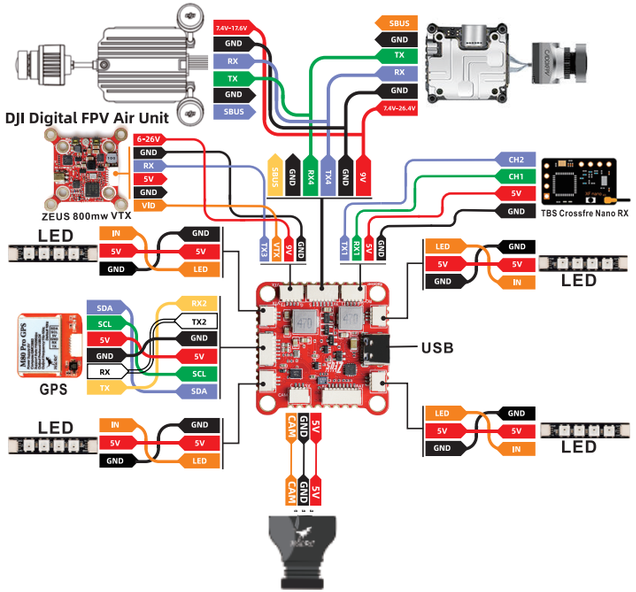

C1 is the default camera output, if you want to use C2 please enable it in Betaflight

1. Electronic switches

Note: VTX socket output voltage 9V

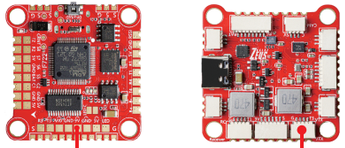

Flight controller 9V output can be switched on/off via betaflight configuration

Default mode is off

2. Key function

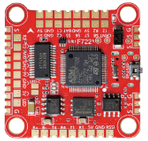

1. Long press the button to insert USB, enter DFU mode
2. Short press to enter LED mode
3. Long press 3 seconds to switch LED status (LED status light is always on)
4. Constant / flash / breathing light / colorful slow flash

3. LED function:

LEDs inside the red area and direct plug-in LEDs are controlled by buttons.

LEDs inside the green area can be programmed via Betaflight.

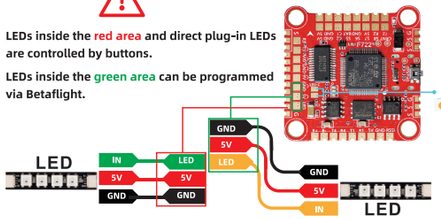

1. Short pad command line input: Resource servo 1 A08 SAVE
2. BF configuration turned on: CHANNEL _ FORWARD

3. Set the CH5 (Aux1) of the receiver to a knob (S1 or S2)

HGLRC