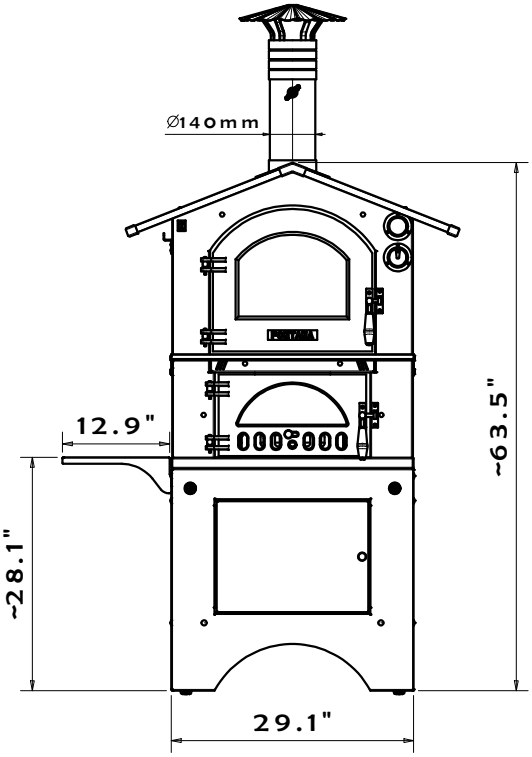
Ø140mm
12.9"
~63.5"
~28.1"
29.1"

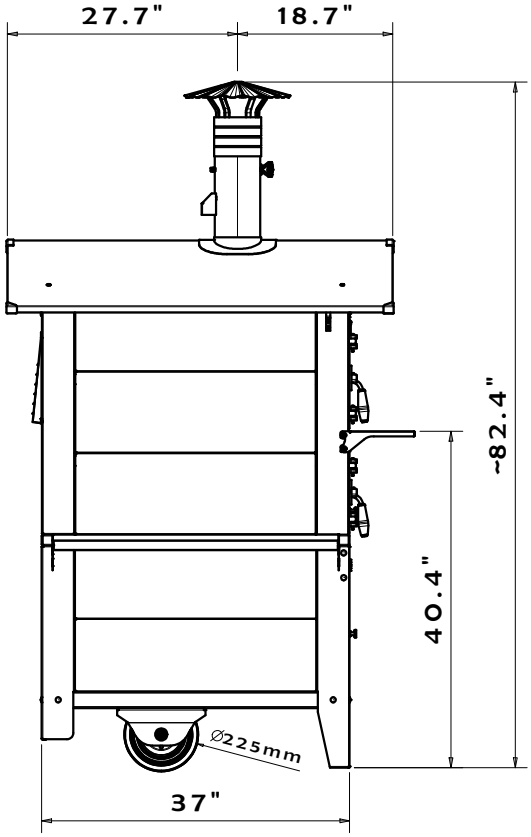
27.7"
18.7"
~82.4"
40.4"
Ø225mm
37"

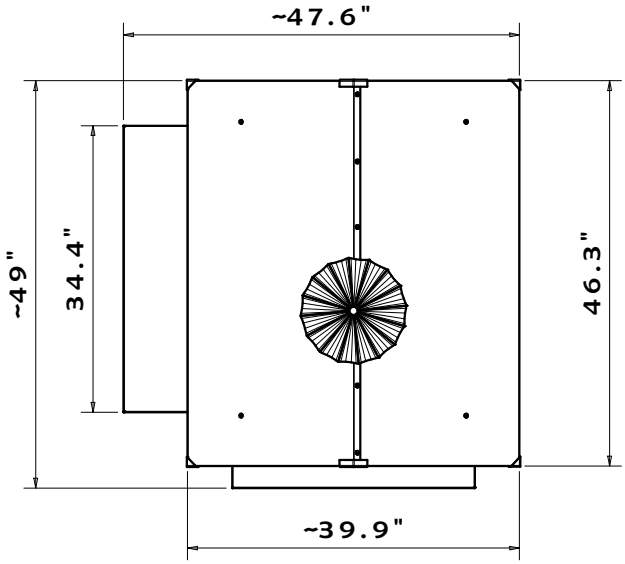
~47.6"
~49"
34.4"
46.3"
~39.9"

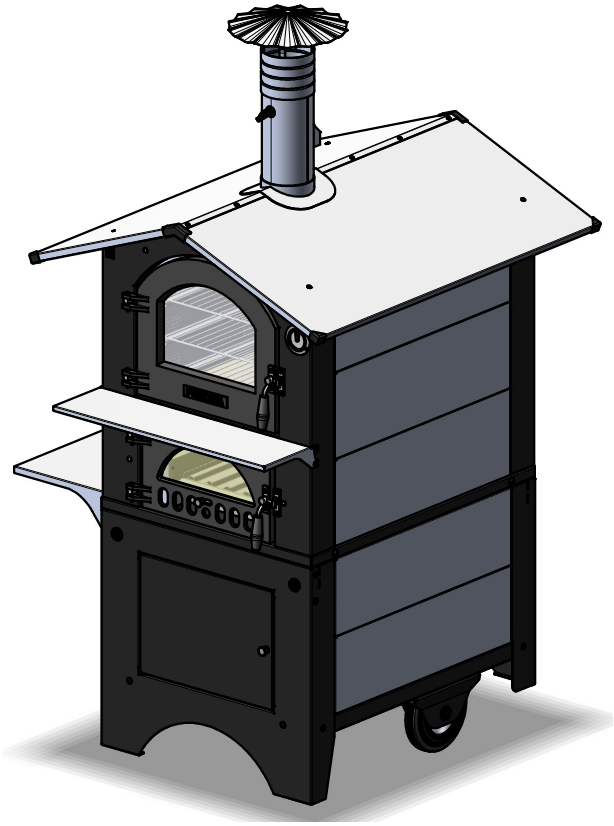

GUSTO 80x45