User Manual

CBO OVENS

Fire Up the Good Life!

CHICAGO BRICK OVEN

A MAJOR CAUSE OF OVEN-RELATED FIRES IS FAILURE TO MAINTAIN REQUIRED CLEARANCES (AIR SPACES) TO COMBUSTIBLE MATERIALS. IT IS OF UTMOST IMPORTANCE THAT THIS OVEN BE INSTALLED ONLY IN ACCORDANCE WITH THESE INSTRUCTIONS.

Ver 091519

Manufacturer's Contact Information

Chicago Brick Oven, LLC
1020 Davey Road, Suite 300 - Woodridge, IL 60517
www.chicagobrickoven.com
(877) 730-7758

IMPORTANT

Register your product to activate your warranty
and gain access to exclusive offers

Register here:

www.chicagobrickoven.com/apps/product-registration

Outdoor Entertainment

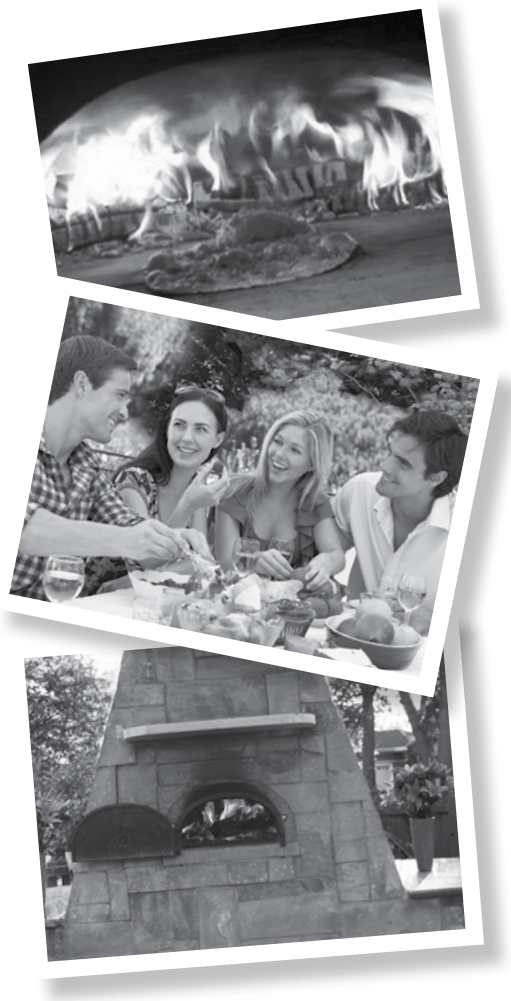

Welcome to a whole new dimension of outdoor cooking and entertaining with your new wood burning brick oven from Chicago Brick Oven!

We invite you to visit (and frequent) our website, **chicagobrickoven.com**. It's a great source of information and suggestions that will help you enjoy your new oven to the fullest:

- Choose from dozens of mouthwatering recipes for everything from appetizers and breads to main courses and desserts, and of course, pizzas.
- Shop for accessories, like professional-grade griddles, skillets, pizza racks and more.
- View dozens of photos of creative outdoor and indoor living spaces other owners across the country have created around their ovens.
- Check out our blog and follow us on Facebook, Twitter and YouTube for the latest news.

We, and your fellow owners and fans of wood burning ovens from Chicago Brick Oven, appreciate hearing from you. We encourage you to share your experiences, special recipes, entertaining ideas and more.

We especially invite you to join The Hangout at **chicagobrickoven.com/hangout**. Here you can share recipes and learn from other chefs—professionals and amateurs alike. And take part in our "Picture Sweepstakes" by uploading your favorite photos of how you've used your wood burning brick oven from Chicago Brick Oven to create your favorite wood-fired foods, entertain family and friends or design a great outdoor and indoor dining space. You can also send your photos to us at **support@chicagobrickoven.com**. If your photos are chosen, we'll send you a Chicago Brick Oven vest and hat and post the photos to our website.

Fire Up the Good Life!

Visit www.chicagobrickoven.com for more information.

READ ALL INSTRUCTIONS BEFORE INSTALLING AND USING THIS WOOD BURNING OVEN. SAVE THESE INSTRUCTIONS.

Before installation, contact local authorities having jurisdiction (municipal building department, fire prevention bureau, etc.) about required permits, restrictions and installation inspection in your area.

Please read this entire manual before you install the Oven. Failure to follow instructions may result in property damage, bodily injury or even death.

Install and use the Oven only in accordance with Chicago Brick Oven's installation and operating instructions (or equivalent).

- For Outdoor Installation of any CBO Oven model, local regulations regarding wood burning equipment should be consulted.
- For Indoor Installation, CBO Oven models are certified to UL Standards as required.
- For Commercial Indoor Installation of any CBO Oven model, the Oven is required to meet ventilation system Standard NFPA 96 or UL 710.
- The CBO-500 and CBO-750 models conform to UL Subject 2162, NSF/ANSI STD 4 and are certified to ULC STD S627.
- The CBO-1000 model conforms to UL 2162, NSF/ANSI STD 4 and is certified to ULC/ORD C2162.

NOTE: PLEASE USE EXTREME CAUTION AROUND THE OVEN. THE OVEN DOME, HEARTH, ARCH AND DOOR WILL BE EXTREMELY HOT WHEN IN USE AND FOR HOURS AFTER USE. KEEP CHILDREN, CLOTHING AND FURNITURE AWAY. CONTACT MAY CAUSE SKIN BURNS.

CAUTION: TO ENSURE THE STABILITY AND SAFE OPERATION OF THE OVEN, DO NOT USE MAKESHIFT MATERIALS IN ITS ASSEMBLY OR THE CONSTRUCTION OF ITS SUPPORT BASE OR DECORATIVE SURROUND. USE ONLY THE MATERIALS SUPPLIED OR RECOMMENDED BY CHICAGO BRICK OVEN.

CAUTION: TO PREVENT DIRT, DEBRIS AND SPILLS FROM CONTAMINATING THE SPLASH ZONE AROUND THE MOUTH OF THE OVEN, THE SURFACE OF THE OVEN FACE MUST BE CONSTRUCTED OF A SMOOTH AND CLEANABLE MATERIAL.

WARNING: Users of this appliance are hereby warned that the burning of wood, natural gas or LP fuel can result in low level exposure to some of the list substances, including formaldehyde, benzene, soot and carbon monoxide. The California Safe Drinking Water and Toxic Environment Act of 1986 (Proposition 65) requires the Governor of California to publish a list of substances known to the State of California to cause cancer or birth defects or other reproductive harm. In addition, businesses must warn customers of potential exposure to such substances. This is caused primarily from the incomplete combustion of natural gas or LP fuel. Properly adjusted burners will minimize incomplete combustion. Exposure to these substances can also be minimized by properly venting the burners by opening a window or using a ventilating hood or fan. For more information, visit www.P65Warnings.ca.gov.

Table of Contents

CBO-500 and CBO-750 Installation Prep 5

CBO-500 Assembly Instructions 6-9

CBO-750 Assembly Instructions 10-13

CBO-1000 Installation Prep 14

CBO-1000 Assembly Instructions 15-18

Detailed Specs

- CBO 500 DIY 20
- CBO 500 Countertop 21
- CBO 750 DIY 22
- CBO 750 Countertop 23
- CBO 750 Mobile 24
- CBO 1000 DIY 25
- CBO 750 Tailgater 26

CBO Oven Operating Instructions 27

CBO Oven Best Practices 28

Customized Enclosure Designs 29

Wood-Fired 101

- Curing Your Oven 30
- Firing Your Oven 31
- How the Oven Works 32
- Cooking in Your Oven 33
- Using Flavored Wood 34

Frequently Asked Questions 35

Limited Warranty 36

CBO-500 and CBO-750 Installation-Prep

INSTALL AND USE ONLY IN ACCORDANCE WITH CHICAGO BRICK OVEN'S INSTALLATION AND OPERATING INSTRUCTIONS (OR EQUIVALENT). CONTACT LOCAL BUILDING OFFICIALS OR FIRE OFFICIALS ABOUT RESTRICTIONS AND INSTALLATION INSPECTION IN YOUR AREA.

Requirements for Clearance from Combustible Materials

To avoid the possibility of a fire, when installing your Chicago Brick Oven wood burning oven (either outdoors or indoors), you must adhere to the following requirements for minimum clearance between your Oven and any combustible materials.

- **Clearance Around the Oven:** The sides and back of the Oven must be at least 10 inches away from combustible materials *(See Aerial View below)*. The top of the Oven must have at least an 18-inch clearance and the bottom a 30-inch clearance from combustible materials *(See Front View below)*.

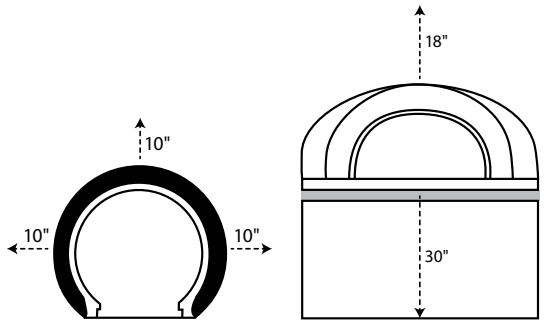

Aerial View *Front View*

- **Clearance Around the Door Opening:** A minimum 30-inch clearance from combustible materials is required on each side of the Door opening and 36 inches from the front of the Door opening. (A Hearth extension may be required to meet these clearance requirements.)
- **Clearance From Wood Storage Area:** There must be a 7-inch clearance between the bottom Insulation Boards of the Oven and any wood storage areas that are under the Oven installation. To ensure the 7-inch clearance, it is recommended that you incorporate a noncombustible physical barrier or some other indicator of the distance within the wood storage area.

THE FACE OF THE ENCLOSURE MUST BE CONSTRUCTED OF A NONCOMBUSTIBLE MATERIAL. THE SURFACE OF THE SPLASH ZONE AROUND THE MOUTH OF THE OVEN MUST BE SMOOTH AND CLEANABLE.

WARNING: DO NOT PACK THE REQUIRED CLEARANCE AREAS WITH INSULATION OR OTHER MATERIALS. A MAJOR CAUSE OF OVEN-RELATED FIRES IS FAILURE TO MAINTAIN REQUIRED CLEARANCES (AIR SPACES) TO COMBUSTIBLE MATERIALS. IT IS OF UTMOST IMPORTANCE THAT THIS OVEN BE INSTALLED ONLY IN ACCORDANCE WITH THESE INSTRUCTIONS.

Requirements for Outdoor/Indoor Chimney Installations

When building the Chimney, it is important to refer to your local building code standards.

The CBO-500 and CBO-750 models come with a DuraTech 6" Anchor Plate (Model #6DT-AP) that works with a Class A Stainless Steel DuraTech 6" Double Wall Pipe (model #6DT-24SS to meet Standard HT103). You can buy this pipe from any building or hearth manufacturer.

A minimum 24-inch pipe section is required. If you are assembling your Chimney at 90°, you can add additional 24-inch sections as required. (The Chimney Pipe cannot have a total bend of more than 30°.) The taller the Flue Stack is, the further away the exhaust is from the cook!

Note: *The Chimney Connector shall not pass through an attic, roof space, closet or similar concealed space, or a floor or ceiling. Where passage through a wall or partition of combustible construction is desired, the installation must conform to the CAN/CSA-B365 installation code for Solid-Fuel-Burning Appliances and Equipment.*

Note: *For indoor installations that utilize a combustible enclosure, only a Class A Chimney should be used from the Anchor Plate on the Oven to the termination point outside of the building/structure. For outdoor noncombustible enclosures, a stainless steel connector can be used.*

Note: *Please refer to the Exhaust Hood manufacturer's recommendations for inspection, maintenance and cleaning.*

WARNING: THE CHIMNEY MUST BE OF A TYPE SUITABLE FOR SOLID FUEL. THE CHIMNEY AND THE REQUIRED CHIMNEY CONNECTOR MUST BE IN GOOD CONDITION AND KEPT CLEAN.

CAUTION: NEVER USE ANY COMBUSTIBLE MATERIALS NEAR THE ANCHOR PLATE OR FLUE STACK. WE RECOMMEND A MINIMUM 6 INCHES OF AIR SPACE BETWEEN THE ANCHOR PLATE AND FLUE AND ANY COMBUSTIBLE MATERIAL. AGAIN, CHECK WITH YOUR LOCAL BUILDING DEPARTMENT TO ENSURE YOU ADHERE TO LOCAL BUILDING CODES!

Arch Dome Insulating Blanket

Very important for correct functioning and life of the CBO Oven!

The Oven Dome must be covered with the supplied Insulating Blanket. The Blanket, which withstands high temperatures, should cover the entire surface area of the Dome. You can cut the Insulating Blanket to insulate around the Metal Anchor Plate. Since most heat loss will occur at the Metal Anchor Plate and top of the Oven, you should ensure these spots are well-insulated.

Note: *It is important that you use all of the insulation supplied to avoid a possible fire.*

Note: *All orders are FOB factory. Inspect all components for damage at time of delivery. Reject delivery if goods are damaged and note on the carrier's paperwork. If damages are discovered after delivery, contact your carrier for recourse.*

Note: *Any variance from the Chicago Brick Oven installation instructions or alterations made to prefabricated Ovens* ***without written approval from Chicago Brick Oven****, will void your warranty.*

Note: *Your Oven is designed for burning solid, dried wood* ***only****. Do not burn scrap wood, compressed logs, coal or other materials. Failure to follow this instruction may damage your Oven and void your warranty.*

CBO-500 Assembly Instructions

CBO-500 OVENS SHOULD BE INSTALLED BY A PROFESSIONAL OR SUITABLY QUALIFIED INDIVIDUAL.

Parts and Components

Dome, Hearth (2 pieces) & Arch

Decorative Door

Bolts

ThermoWorks Thermometer

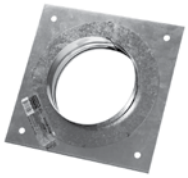

DuraVent Anchor Plate (Model #9441, 6")

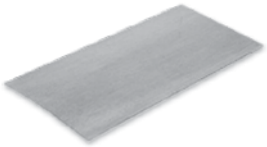

18-Gauge Galvannealed Steel Plate

Insulation Boards

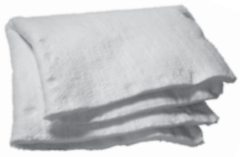

Insulating Blanket

Mortar

Cooking Accessories: Pizza Peel & Brush

Support Base

The CBO-500 Oven Support Base must:

- be constructed of masonry or metal
- have at least the same area dimensions as the external footprint of the Oven

You must check with your local Building Department to determine the amount of clearance required by local building codes between the Oven and Decorative Cover. CBO recommends you add at least 8 inches for the width (4 inches per side) and 5 inches for the depth (on the back side of the Oven) to accommodate the Decorative Cover and Insulation. Also see the *Requirements for Clearance from Combustible Materials* section on Page 8 of this manual.

CAUTION: DO NOT USE ANY COMBUSTIBLE MATERIALS IN THE CONSTRUCTION OF THE COVERING (SHROUD) OF THE OVEN. ALL BUILDING MATERIALS USED NEAR THE OVEN, METAL ANCHOR PLATE AND FLUE PIPE SHOULD BE NONCOMBUSTIBLE AND NEVER MADE OF WOOD.

The Support Base surface must be flat, level and strong enough to support the total combined weight of the Oven (350 lbs.) and the Decorative Cover design you choose.

The two vertical support feet of the Support Base are typically made of concrete block. The horizontal Support Base is typically made of a 4-inch-thick, steel-reinforced concrete slab. The standard height of the horizontal part of the Support Base is 42 inches.

Note: *Imagine the Oven's Support Base as a table. The table's legs are concrete blocks and the tabletop is a 4-inch-thick concrete slab. To build the Support Base, you build the support legs out of concrete block, then on top of that leg base, you build a frame to pour a concrete slab (the tabletop). On the concrete slab (the tabletop), you position the Sub-hearth Insulation Boards, then the Hearth, then the Oven.*

CAUTION: TO AVOID THE POSSIBILITY OF A FIRE, NONCOMBUSTIBLE MATERIALS MUST BE USED IN THE CONSTRUCTION OF THE SUPPORT BASE AND ANY FRAMING USED AROUND THE OVEN.

CBO-500 Assembly Instructions

Hearth Insulation

Sub-hearth Insulation Boards (supplied)

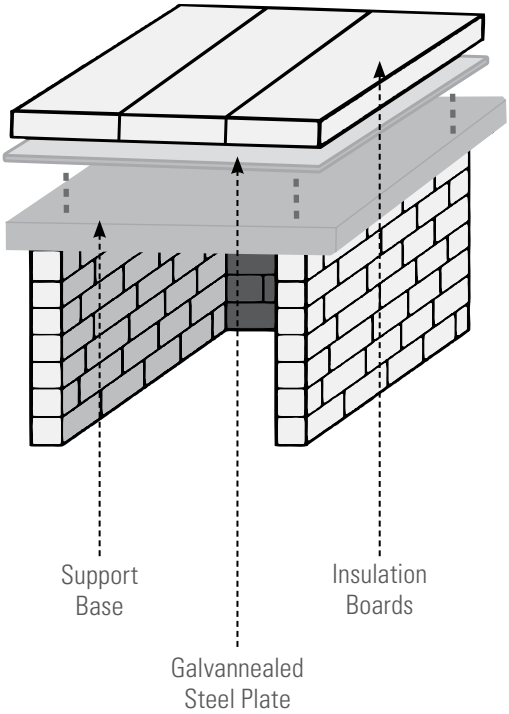

Your CBO-500 Oven comes with Insulation Boards (shipped in three pieces) that are placed under both pieces of the Hearth—on top of the 18-gauge Galvannealed Steel Plate—for insulation.

Place the Galvannealed Steel Plate on the Support Base. Next, lay the Insulation Boards over the Galvannealed Steel Plate. Then set the Oven Base on the Insulation Boards. Do not use any materials (mortar, cement, glue) to attach the Oven Base to the Insulation Boards. *It is very important that the entire Oven Base come in contact with the Insulation Boards*.

The Insulation Boards must be cut so that they are flush, or slightly set back, with the front end of the Hearth, the Support Base and the two vertical support feet in order for the final Decorative Cover to fit properly and protect the Insulation Boards from exposure to moisture. The Insulation Boards can be cut-to-size with a regular jigsaw.

The Oven's decorative finish should be built on top of the Support Base, *not on top of the Insulation Boards. Remember, the Insulation Boards should not be exposed to the elements and should not get wet.*

Note: *It is important that you use all of the insulation supplied to avoid a possible fire. The Sub-hearth Insulation should not be exposed to the elements and should never get wet. It is recommended that you sweep or vacuum the Galvannealed surface to remove debris before Hearth installation.*

Oven Assembly

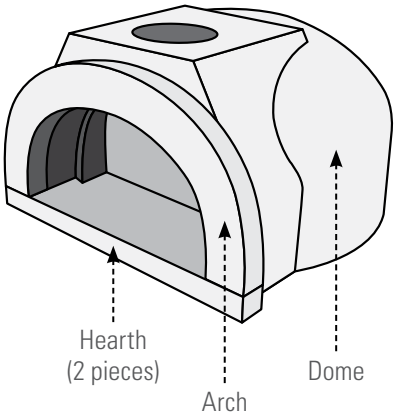

Shown is the final assembly of the four-piece CBO-500 Oven. The final assembly will rest on the Galvannealed Steel Plate and Insulation Boards on your Support Base.

CBO-500 Assembly Instructions

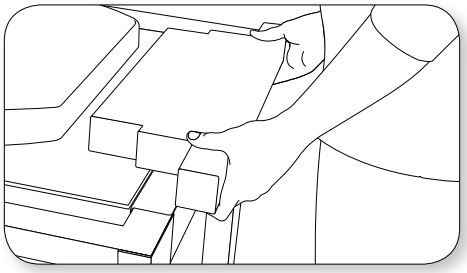

1. After the Galvannealed Steel Plate has been set and the Insulation Boards placed on top of it, you are now ready to set the Hearth into place. Line the Front Hearth piece up with the front of the Oven base. As you can see, the Insulation Boards are not exposed to the elements and cover the entire Main Hearth.

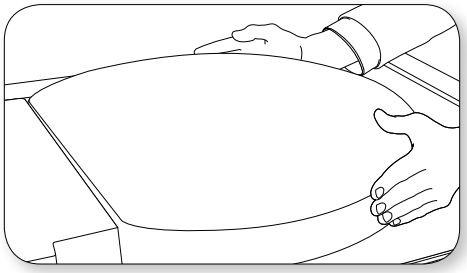

2. Push the Main Hearth into place so there is a tight fit with the Front Hearth.

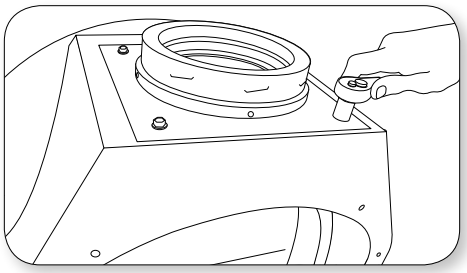

3. Remove the Front Hearth piece and place the Dome over the top of the Main Hearth. Make certain the front of the Oven is lined up, then replace the Front Hearth. Attach the Anchor Plate to the top of the Oven with the four (4) bolts provided. (ss 1/4 - 20 x 1/2")

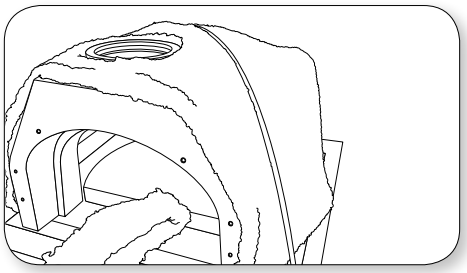

4. Lay the Insulating Blanket over the top of the Oven. Cut out a hole for the Flue Pipe, and cut the Insulating Blanket to line up with the front of the Oven. If you have any extra insulation, put it on the top of the Oven.

   Note: *Industrial-grade aluminum foil may be placed over the insulation for moisture protection.*

   Note: *It is important that you use all of the insulation supplied to avoid a possible fire.*

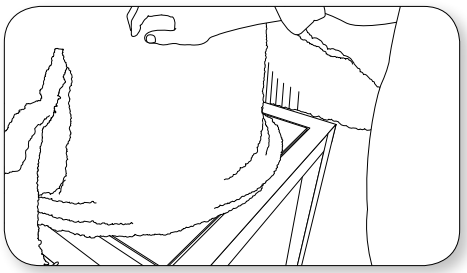

5. Cut the back of the Insulating Blanket with a razor blade and tuck it into place. Pull the sides of the Insulating Blanket around the back of the Oven. You can tie the insulation with metal straps, or aluminum tape, or just leave it in place.

CBO-500 Assembly Instructions

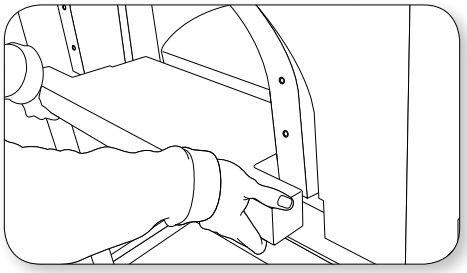

6. In this picture, you will see we have a Metal Shroud. If you are building a Stone or Brick Shroud, it should follow the contour of the Oven, but not rest on the Arch. Now slide the Front Hearth into place and up against the Main Hearth as close as possible.

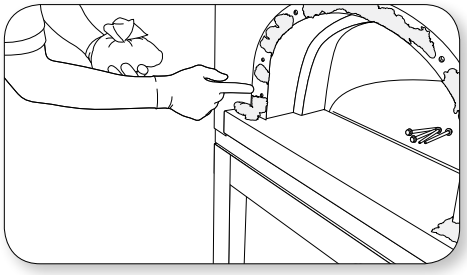

7. You are now ready to mortar the Arch to the Dome. Use the refractory mortar provided to completely seal the space between the Arch and Dome. You will also put some mortar on the Front Hearth under the Arch.

   You don't need a lot of mortar; just enough to make a seal. Place the mortar all the way around the Arch and on the Hearth on both sides under the Arch.

   Note: *Be very careful to not get any mortar in the mounting holes for the Arch and Door. If you do get mortar in the holes, attempt to clean it out immediately; the bolts will not go in all the way if mortar is present.*

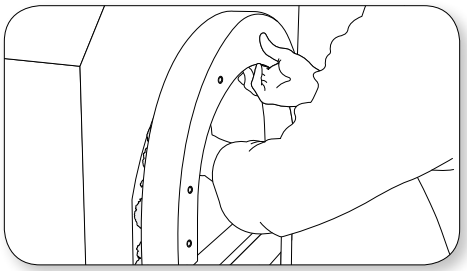

8. Line up the Arch and put the two top bolts in place (ss 1/4 - 20 x 1 3/4"). Tighten the bolts to hand-tight. Upon completion of the install, you will tighten the bolts more; at this time you just want to hold the Arch in place.

   Note: *Do not over-torque bolts or you may dislodge the threaded inserts!*

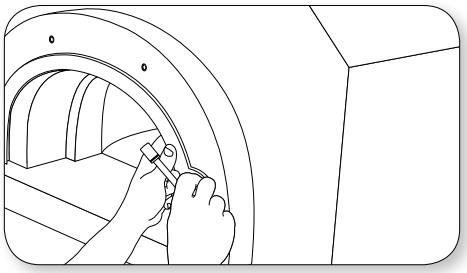

9. Attach the Decorative Door and insert the bolts to hold it in place (ss 1/4 - 20 x 2 1/2"). Once you have all four bolts in place, you should tighten them, but do not force it. You should create a nice seal between the Arch and the Dome with the mortar you used.

   Note: *Do not over-torque bolts or you may dislodge the threaded inserts!*

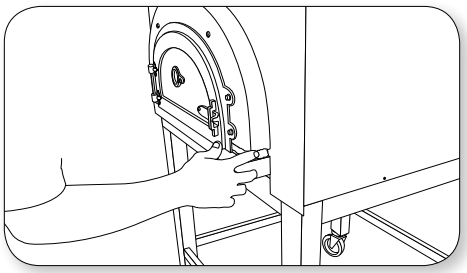

10. Use some mortar to finish off the install. If the Shroud is brick or stone, you should also use mortar around the top of the Arch. If you are using a Metal Shroud, use a high-temperature resistant silicone on the top of the Arch to seal the joint with the Shroud.

    Note: *Each year you will need to touch-up the mortar and/or silicone for cosmetic reasons.*

CBO-750 Assembly Instructions

CBO-750 OVENS SHOULD BE INSTALLED BY A PROFESSIONAL OR SUITABLY QUALIFIED INDIVIDUAL.

Parts and Components

Dome, Hearth (3 pieces) & Arch

Decorative Door

Bolts

ThermoWorks Thermometer

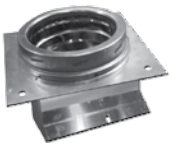

Anchor Box with DuraVent Anchor Plate— For UL-Required Installations (Model #9441, 6")

18-Gauge Galvannealed Steel Plate

Insulation Boards

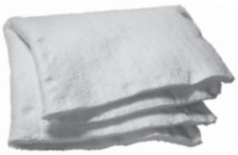

Insulating Blanket

Mortar

Cooking Accessories: Pizza Peel & Brush

Support Base

The CBO-750 Oven Support Base must:

- be constructed of masonry or metal
- have at least the same area dimensions as the external footprint of the Oven

You must check with your local Building Department to determine the amount of clearance required by local building codes between the Oven and Decorative Cover. CBO recommends you add at least 8 inches for the width (4 inches per side) and 5 inches for the depth (on the back side of the Oven) to accommodate the Decorative Cover and Insulation. Also see the *Requirements for Clearance from Combustible Materials* section on Page 8 of this manual.

CAUTION: DO NOT USE ANY COMBUSTIBLE MATERIALS IN THE CONSTRUCTION OF THE COVERING (SHROUD) OF THE OVEN. ALL BUILDING MATERIALS USED NEAR THE OVEN, METAL ANCHOR PLATE AND FLUE PIPE SHOULD BE NONCOMBUSTIBLE AND NEVER MADE OF WOOD.

The Support Base surface must be flat, level and strong enough to support the total combined weight of the Oven (480 lbs.) and the Decorative Cover design you choose.

The two vertical support feet of the Support Base are typically made of concrete block. The horizontal Support Base is typically made of a 4-inch-thick, steel-reinforced concrete slab. The standard height of the horizontal part of the Support Base is 42 inches.

Note: *Imagine the Oven's Support Base as a table. The table's legs are concrete blocks and the tabletop is a 4-inch-thick concrete slab. To build the Support Base, you build the support legs out of concrete block, then on top of that leg base, you build a frame to pour a concrete slab (the tabletop). On the concrete slab (the tabletop), you position the Sub-hearth Insulation Boards, then the Hearth, then the Oven.*

CAUTION: TO AVOID THE POSSIBILITY OF A FIRE, NONCOMBUSTIBLE MATERIALS MUST BE USED IN THE CONSTRUCTION OF THE SUPPORT BASE AND ANY FRAMING USED AROUND THE OVEN.

CBO-750 Assembly Instructions

Hearth Insulation

Sub-hearth Insulation Boards (supplied)

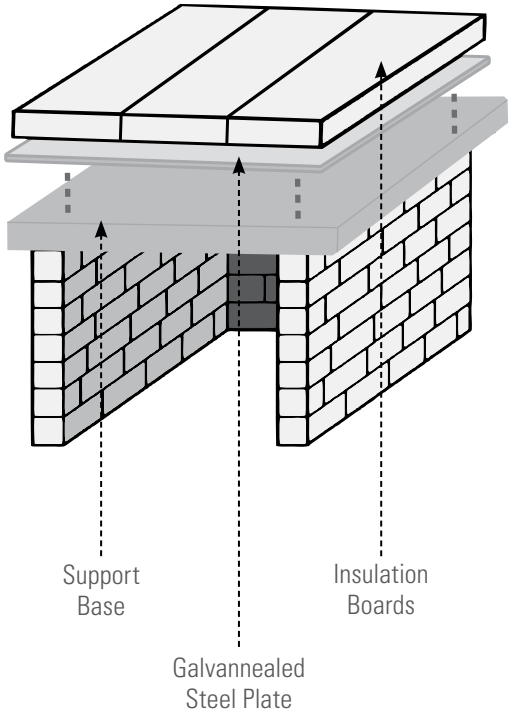

Your CBO-750 Oven comes with Insulation Boards (shipped in three pieces) that are placed under both pieces of the Hearth—on top of the 18-gauge Galvannealed Steel Plate—for insulation.

Place the Galvannealed Steel Plate on the Support Base. Next, lay the Insulation Board over the Galvannealed Steel Plate. Then set the Oven Base on the Insulation Boards. Do not use any materials (mortar, cement, glue) to attach the Oven Base to the Insulation Boards. *It is very important that the entire Oven Base come in contact with the Insulation Boards*.

The Insulation Boards must be cut so that they are flush, or slightly set back, with the front end of the Hearth, the Support Base and the two vertical support feet in order for the final Decorative Cover to fit properly and protect the Insulation Boards from exposure to moisture. The Insulation Boards can be cut-to-size with a regular jigsaw.

The Oven's decorative finish should be built on top of the Support Base, *not on top of the Insulation Boards. Remember, the Insulation Boards should not be exposed to the elements and should not get wet.*

Note: *It is important that you use all of the insulation supplied to avoid a possible fire. The sub-hearth insulation should not be exposed to the elements and should never get wet. It is recommended that you sweep or vacuum the Galvannealed surface to remove debris before Hearth installation.*

Oven Assembly

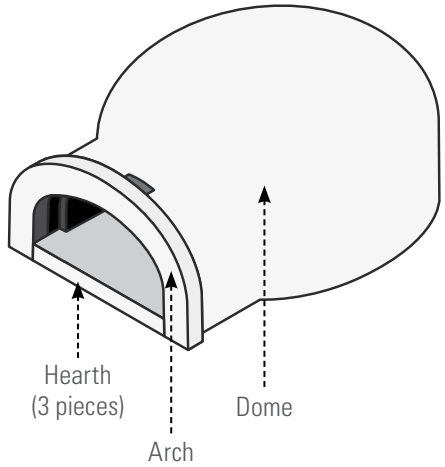

Shown is the final assembly of the five-piece CBO-750 Oven. The final assembly will rest on the Galvannealed Steel Plate and Insulation Boards on your Support Base.

CBO-750 Assembly Instructions

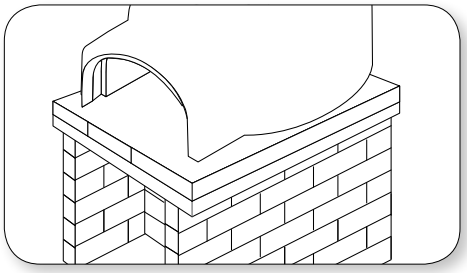

1. After you have built the Support Base and positioned the Insulation Boards and Galvannealed Steel Plate as shown, you are ready to place the Dome Assembly on the Insulation Boards. You have two Dome Assembly placement options:
   - You can align the front of the Dome Assembly with the edge of the Insulation Boards and your 2-inch Arch Assembly and Door will overhang.
   - You can recess the Dome approximately 2 inches from the edge of the Insulation Boards to accommodate the Arch and Door Assembly.

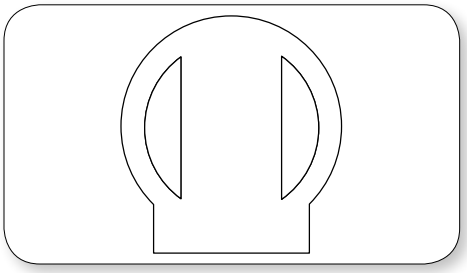

2. Place the two "Wing" Hearth pieces inside the Dome. The pieces should fit snug against the walls of the Dome. A Chicago Brick Oven wood burning oven is a custom-manufactured product so some variances may occur, but will not affect the performance of your Oven.

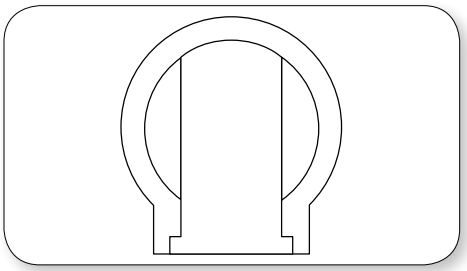

3. Finally, place the Center Hearth piece into position. DO NOT DROP the Center Hearth piece into position. The recommended approach is to gently slide the centerpiece into position. Align the edges of the wing pieces to the edges of the centerpiece. A Chicago Brick Oven wood burning oven is a custom-manufactured product so some variances may occur, but will not affect the performance of your Oven.

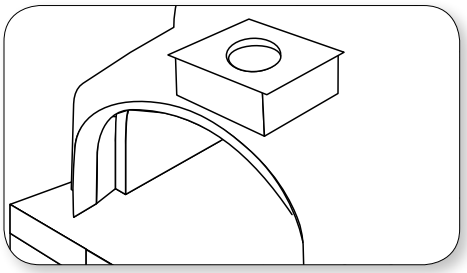

4. Attach the Anchor Box to the Dome Assembly aligning the pre-drilled holes and included bolts (ss 1/4 - 20 x 1/2"). Install the Anchor Box before attaching the Insulating Blanket to the Oven.

   Note: *Do not over-torque bolts or you may dislodge the threaded inserts!*

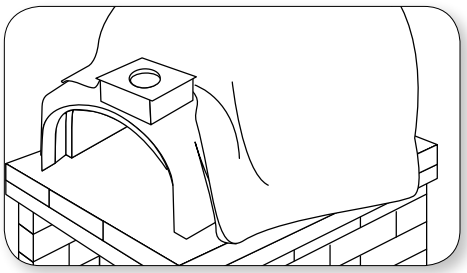

5. Lay the Insulating Blanket over the top of the Oven. Cut out a hole for the Flue Pipe, and cut the Insulating Blanket to line up with the front of the Oven. If you have any extra insulation, put it on the top of the Oven.

   Note: *Industrial-grade aluminum foil may be placed over the insulation for moisture protection.*

   Note: *It is important that you use all of the insulation supplied to avoid a possible fire.*

CBO-750 Assembly Instructions

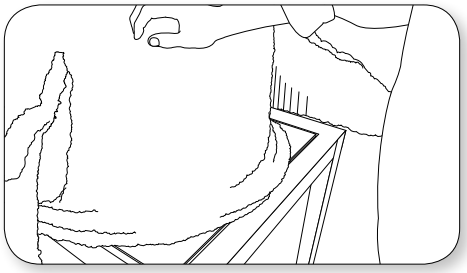

6. Cut the back of the Insulating Blanket with a razor blade and tuck it into place. Pull the sides of the Insulating Blanket around the back of the Oven. You can tie the insulation with metal straps, or aluminum tape, or just leave it in place.

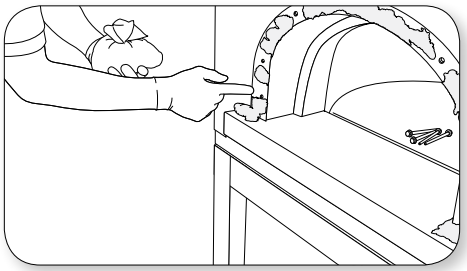

7. You are now ready to mortar the Arch to the Dome. Use the refractory mortar provided to completely seal the space between the Arch and Dome. You will also put some mortar on the Front Hearth under the Arch.

   You don't need a lot of mortar; just enough to make a seal. Place the mortar all the way around the Arch and on the Hearth on both sides under the Arch.

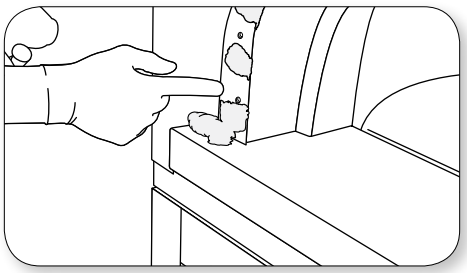

8. **Note:** *Be very careful to not get any mortar in the mounting holes for the Arch and Door. If you do get mortar in the holes, attempt to clean it out immediately; the bolts will not go in all the way if mortar is present.*

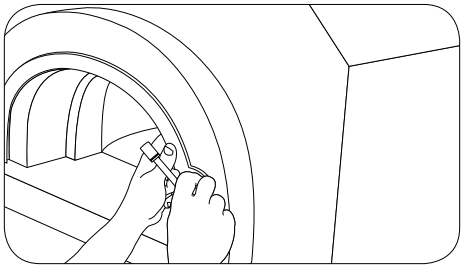

9. Attach the Metal Door and insert the bolts to hold it in place (ss 1/4 - 20 x 2 1/2").

   Once you have all four bolts in place, you should tighten them, but do not force it. You should create a nice seal between the Arch and the Dome with the mortar you used.

   Note: *Do not over-torque bolts or you may dislodge the threaded inserts!*

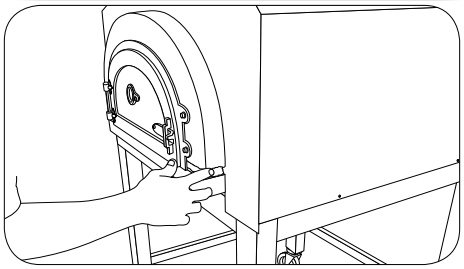

10. Use some mortar to finish off the install. If the Shroud is brick or stone, you should also use mortar around the top of the Arch. If you are using a Metal Shroud, use a high-temperature resistant silicone on the top of the Arch to seal the joint with the Shroud.

    Note: *Each year you will need to touch-up the mortar and/or silicone for cosmetic reasons.*

CBO-1000 Installation Prep

INSTALL AND USE ONLY IN ACCORDANCE WITH CHICAGO BRICK OVEN'S INSTALLATION AND OPERATING INSTRUCTIONS (OR EQUIVALENT). CONTACT LOCAL BUILDING OFFICIALS OR FIRE OFFICIALS ABOUT RESTRICTIONS AND INSTALLATION INSPECTION IN YOUR AREA.

Requirements for Clearance from Combustible Materials

To avoid the possibility of a fire, when installing your Chicago Brick Oven wood burning oven (either outdoors or indoors), you must adhere to the following requirements for minimum clearance between your Oven and any combustible materials.

- **Clearance Around the Oven:** The sides and back of the Oven Dome, not including insulation, must be at least 4 inches away from combustible materials *(See Aerial View below).* The top of the Oven Dome must have at least a 10-inch clearance and the bottom a 30-inch clearance from combustible materials *(See Front View below).*

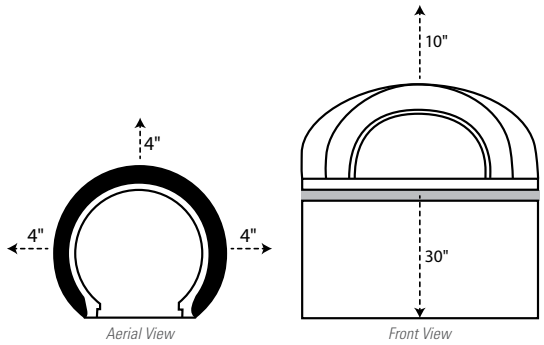

- **Clearance Around the Door Opening:** A minimum 30-inch clearance from combustible materials is required on each side of the Door opening and 36 inches from the front of the Door opening. (A Hearth extension may be required to meet these clearance requirements.)
- **Clearance From Wood Storage Area:** There must be a 7-inch clearance between the bottom Insulation Boards of the Oven and any wood storage areas that are under the Oven installation. To ensure the 7-inch clearance, it is recommended that you incorporate a noncombustible physical barrier or some other indicator of the distance within the wood storage area.

THE FACE OF THE ENCLOSURE MUST BE CONSTRUCTED OF A NONCOMBUSTIBLE MATERIAL. THE SURFACE OF THE SPLASH ZONE AROUND THE MOUTH OF THE OVEN MUST BE SMOOTH AND CLEANABLE.

WARNING: DO NOT PACK THE REQUIRED CLEARANCE AREAS WITH INSULATION OR OTHER MATERIALS. A MAJOR CAUSE OF OVEN-RELATED FIRES IS FAILURE TO MAINTAIN REQUIRED CLEARANCES (AIR SPACES) TO COMBUSTIBLE MATERIALS. IT IS OF UTMOST IMPORTANCE THAT THIS OVEN BE INSTALLED ONLY IN ACCORDANCE WITH THESE INSTRUCTIONS.

Requirements for Outdoor/Indoor Chimney Installations

When building the Chimney, it is important to refer to your local building code standards.

The CBO-1000 Oven comes with a DuraVent 8" Anchor Plate (Model #8DT-AP) that works with a Class A Stainless Steel DuraTech 8" Double Wall Pipe (Model #8DT-24SS) to meet Standard HT 103.

A minimum 24-inch pipe section is required. If you are assembling your Chimney at 90°, you can add additional 24-inch sections as required. (The Chimney Pipe cannot have a total bend of more than 30°.) The taller the Flue Stack is, the further away the exhaust is from the cook!

Note: *The Chimney Connector shall not pass through an attic, roof space, closet or similar concealed space, or a floor or ceiling. Where passage through a wall or partition of combustible construction is desired, the installation must conform to the CAN/CSA-B365 installation code for Solid-Fuel-Burning Appliances and Equipment.*

Note: *For indoor installations that utilize a combustible enclosure, only a Class A Chimney should be used from the Anchor Plate on the Oven to the termination point outside of the building/structure. For outdoor noncombustible enclosures, a stainless steel connector can be used.*

Note: *Please refer to the Exhaust Hood manufacturer's recommendations for inspection, maintenance and cleaning.*

WARNING: THE CHIMNEY MUST BE OF A TYPE SUITABLE FOR SOLID FUEL. THE CHIMNEY AND THE REQUIRED CHIMNEY CONNECTOR MUST BE IN GOOD CONDITION AND KEPT CLEAN.

CAUTION: NEVER USE ANY COMBUSTIBLE MATERIALS NEAR THE ANCHOR PLATE OR FLUE STACK. WE RECOMMEND A MINIMUM 6 INCHES OF AIR SPACE BETWEEN THE ANCHOR PLATE AND FLUE AND ANY COMBUSTIBLE MATERIAL. AGAIN, CHECK WITH YOUR LOCAL BUILDING DEPARTMENT TO ENSURE YOU ADHERE TO LOCAL BUILDING CODES!

Arch Dome Insulating Blanket

Very important for correct functioning and life of the CBO-1000 Oven!

The Oven Dome must be covered with a 3-inch-thick layer of the supplied Insulating Blanket. The Blanket, which withstands high temperatures, should cover the entire surface area of the Dome. You can cut the Insulating Blanket to insulate around the Metal Anchor Plate. Since most heat loss will occur
at the Metal Anchor Plate and top of the Oven, you should ensure these spots are well-insulated.

Note: *It is important that you use all of the insulation supplied to avoid a possible fire.*

Note: *All orders are FOB factory. Inspect all components for damage at time of delivery. Reject delivery if goods are damaged and note on the carrier's paperwork. If damages are discovered after delivery, contact your carrier for recourse.*

Note: *Any variance from the Chicago Brick Oven installation instructions or alterations made to prefabricated Ovens* ***without written approval from Chicago Brick Oven****, will void your warranty.*

Note: *Your Oven is designed for burning solid, dried wood* ***only****. Do not burn scrap wood, compressed logs, coal or other materials. Failure to follow this instruction may damage your Oven and void your warranty.*

CBO-1000 Assembly Instructions

CBO-1000 OVENS SHOULD BE INSTALLED BY A PROFESSIONAL OR SUITABLY QUALIFIED INDIVIDUAL.

Parts and Components

Dome (2 pieces), Hearth (3 pieces) & Arch

Removable Insulating Door

Washers & Bolts

ThermoWorks Thermometer

Anchor Box with DuraTech 8" Anchor Plate— For UL-Required Installations (Model #8DT-AP)

* Works with Class A Stainless Steel DuraTech 8" Double Wall Pipe (model #8DT-24SS) to meet Standard HT 103.

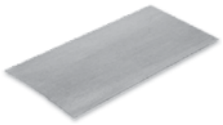

14-Gauge Galvannealed Steel Plate

Steel Binding Plate

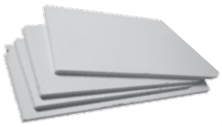

Insulation Boards

Insulating Blankets

Mortar

Oven Accessory: Brush

Support Base

The CBO-1000 Oven Support Base must:

- be constructed of masonry or metal
- have at least the same area dimensions as the external footprint of the Oven

You must check with your local Building Department to determine the amount of clearance required by local building codes between the Oven and Decorative Cover. CBO recommends you add at least 8 inches for the width (4 inches per side) and 5 inches for the depth (on the back side of the Oven) to accommodate the Decorative Cover and Insulation. Also see the *Requirements for Clearance from Combustible Materials* section on Page 18 of this manual.

CAUTION: DO NOT USE ANY COMBUSTIBLE MATERIALS IN THE CONSTRUCTION OF THE COVERING (SHROUD) OF THE OVEN. ALL BUILDING MATERIALS USED NEAR THE OVEN, METAL ANCHOR PLATE AND FLUE PIPE SHOULD BE NONCOMBUSTIBLE AND NEVER MADE OF WOOD.

The Support Base surface must be flat, level and strong enough to support the total combined weight of the Oven (920 lbs.) and the Decorative Cover design you choose.

The two vertical support feet of the Support Base are typically made of concrete block. The horizontal Support Base is typically made of a 4-inch-thick, steel-reinforced concrete slab. The standard height of the horizontal part of the Support Base is 42 inches.

Note: *Imagine the Oven's Support Base as a table. The table's legs are concrete blocks and the tabletop is a 4-inch-thick concrete slab. To build the Support Base, you build the support legs out of concrete block, then on top of that leg base, you build a frame to pour a concrete slab (the tabletop). On the concrete slab (the tabletop), you position the Sub-hearth Insulation Boards, then the Hearth, then the Oven.*

CAUTION: TO AVOID THE POSSIBILITY OF A FIRE, NONCOMBUSTIBLE MATERIALS MUST BE USED IN THE CONSTRUCTION OF THE SUPPORT BASE AND ANY FRAMING USED AROUND THE OVEN.

CBO-1000 Assembly Instructions

Hearth Insulation

Sub-hearth Insulation Board (supplied)

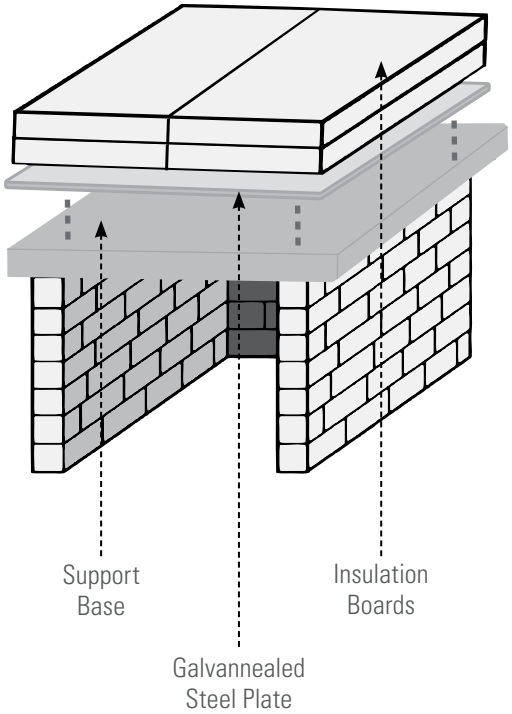

Your CBO-1000 Oven comes with Insulation Boards (shipped in four pieces) that are placed under both pieces of the Hearth—on top of the 14-gauge Galvannealed Steel Plate—for insulation.

Place the Galvannealed Steel Plate on the Support Base. Next, lay two layers of Insulation Board over the Galvannealed Steel Plate. Then set the Oven Base on the Insulation Boards. Do not use any materials (mortar, cement, glue) to attach the Oven Base to the Insulation Boards. *It is very important that the entire Oven Base come in contact with the Insulation Boards.*

The Insulation Boards must be cut so that they are flush, or slightly set back, with the front end of the Hearth, the Support Base and the two vertical support feet in order for the final Decorative Cover to fit properly and protect the Insulation Boards from exposure to moisture. The Insulation Boards can be cut-to-size with a regular jigsaw.

The Oven's decorative finish should be built on top of the Support Base, *not on top of the Insulation Boards. Remember, the Insulation Boards should not be exposed to the elements and should not get wet.*

Note: *It is important that you use all of the insulation supplied to avoid a possible fire. The sub-hearth insulation should not be exposed to the elements and should never get wet. It is recommended that you sweep or vacuum the Galvannealed surface to remove debris before Hearth installation.*

Oven Assembly

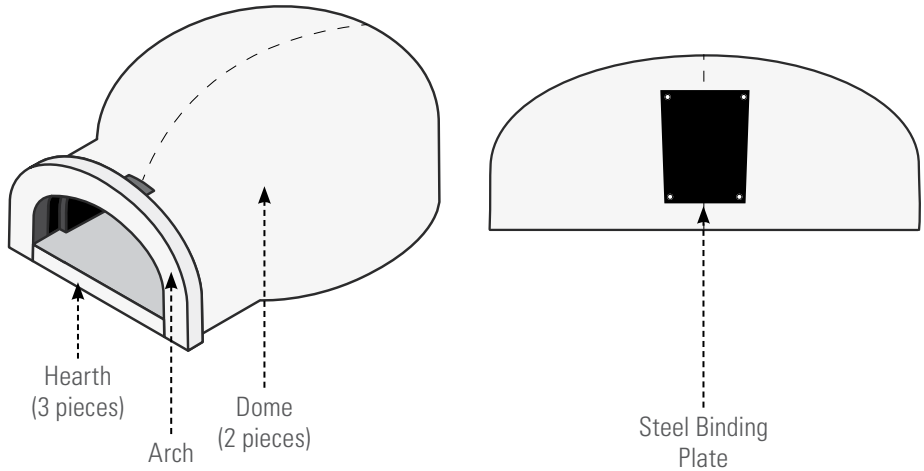

Shown is the final assembly of the six-piece CBO-1000 Oven. The final assembly will rest on the Galvannealed Steel Plate and Insulation Boards on your Support Base.

CBO-1000 Assembly Instructions

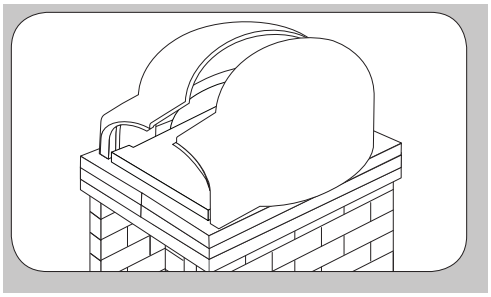

1. After you have built the Support Base and positioned the two Insulation Board layers and Galvannealed Steel Plate as shown, you are ready to place the left side of the Dome Assembly on the Insulation Boards, then join the right side of the Dome Assembly. You have two Dome Assembly placement options:
   - You can align the front of the Dome Assembly with the edge of the Insulation Boards and your 2 1/2-inch Arch Assembly and Door will overhang.
   - You can recess the Dome approximately 2 1/2 inches from the edge of the Insulation Boards to accommodate the Arch and Door Assembly.

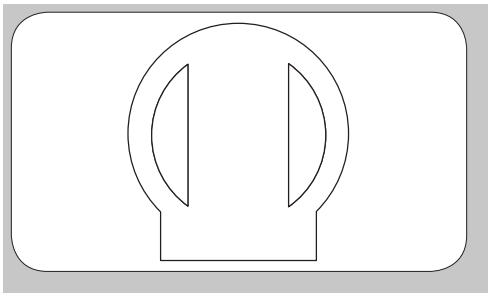

2. Place the two "Wing" Hearth pieces inside the Dome. The pieces should fit snug against the walls of the Dome. A Chicago Brick Oven wood burning oven is a custom-manufactured product so some variances may occur, but will not affect the performance of your Oven.

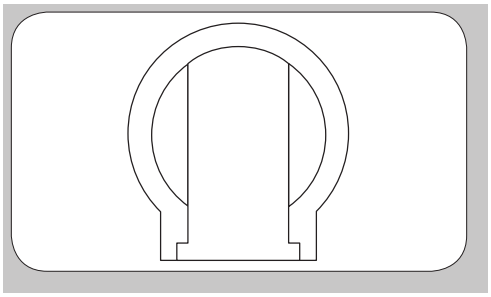

3. Finally, place the Center Hearth piece into position. DO NOT DROP the Center Hearth piece into position. The recommended approach is to gently slide the centerpiece into position. Align the edges of the wing pieces to the edges of the centerpiece.

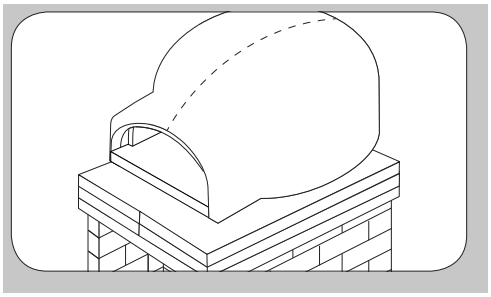

4. After joining both Dome Assembly pieces together, lightly wipe seam area of 2-piece dome with damp cloth.

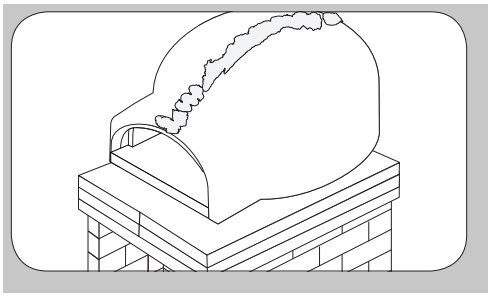

5. Generously apply supplied high-temperature mortar along seam with a putty knife.

   Note: *Be very careful to not get any mortar in the pre-drilled holes for the Steel Binding Plate on the back of the Dome Assembly. If you do get mortar in the holes, attempt to clean it out immediately; the bolts will not go in all the way if mortar is present.*

CBO-1000 Assembly Instructions

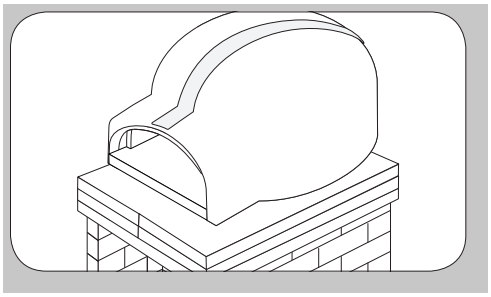

6. Smooth out with a trowel. Wipe away any excess mortar.

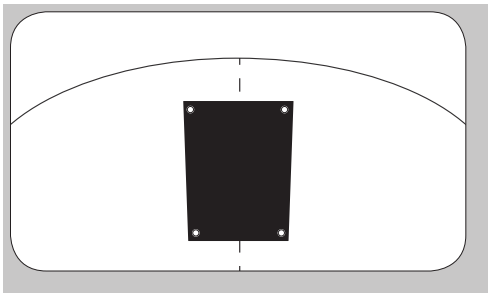

7. Attach the Steel Binding Plate to the back of the Dome Assembly aligning the pre-drilled holes and included bolts. (Steel plate bolts (ss 1/4-20 x 1/2") 4).

   Note: *Do not over-torque bolts or you may dislodge the threaded inserts!*

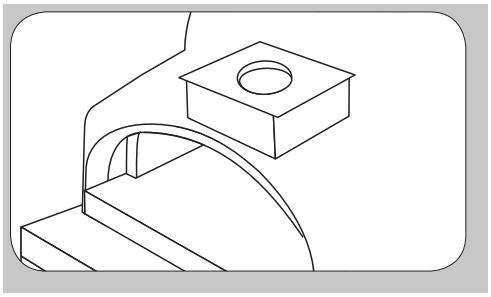

8. Attach the Anchor Box to the Dome Assembly aligning the pre-drilled holes and included bolts. (Anchor plate bolts (ss 1/4-20 x 1/2") 4). Install the Anchor Box before attaching the Insulating Blankets to the Oven.

   Note: *Do not over-torque bolts or you may dislodge the threaded inserts!*

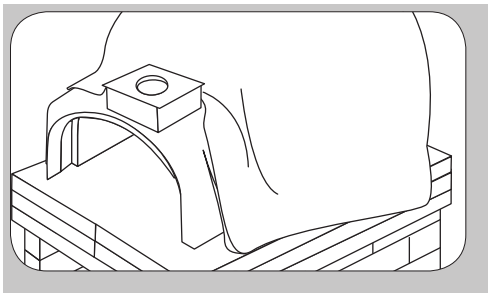

9. Layer the 2-inch and 1-inch thick Insulating Blankets over the top of the Oven to create 3 inches of thickness. Cut out a hole for the Flue Pipe, and cut the Insulating Blankets to line up with the front of the Oven.

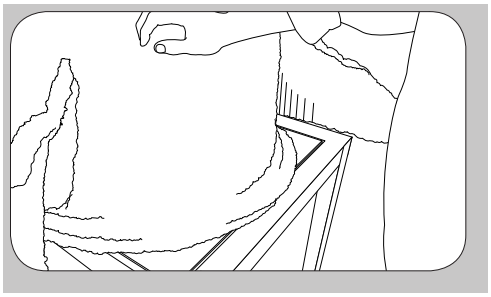

10. Cut excess fabric from the back of the Insulating Blankets with a razor blade and tuck them into place. Put any extra insulation on the top of the Oven. Pull the sides of the Insulating Blankets around the back of the Oven. You can tie the insulation with metal straps, or aluminum tape, or just leave it in place.

    Note: *Industrial-grade aluminum foil may be placed over the insulation for moisture protection.*

    Note: *It is important that you use all of the insulation supplied to avoid a possible fire.*

CBO-1000 Assembly Instructions

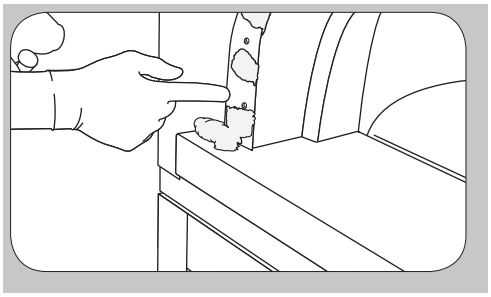

11 **Note:** *Be very careful to not get any mortar in the mounting holes for the Arch and Door. If you do get mortar in the holes, attempt to clean it out immediately; the bolts will not go in all the way if mortar is present.*

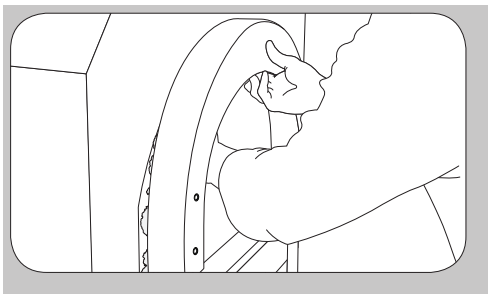

12 Line up the Arch and put the four bolts in place.
(Arch bolts (ss 5/16-18 x 2 1/2")

Tighten the bolts to hand-tight and then tighten with a wrench just a little more.

Note: *Do not over-torque bolts or you may dislodge the threaded inserts!*

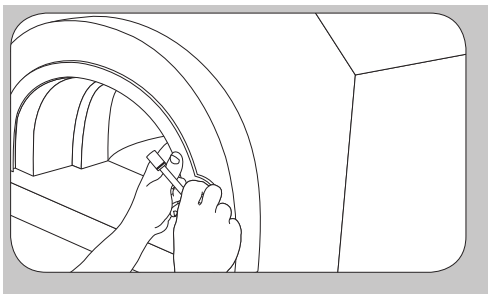

13 Use some mortar to finish off the install. If the Shroud is brick or stone, you should also use mortar around the top of the Arch. If you are using a Metal Shroud, use a high-temperature resistant silicone on the top of the Arch to seal the joint with the Shroud.

Note: *Each year you will need to touch-up the mortar and/or silicone for cosmetic reasons.*

CBO-500 DIY KIT Specifications

UPC 705604321215 | SKU CBO-O-KIT-500

Details

- 5-Piece Oven (Dome, 2-piece Hearth, Arch, Decorative Door)
- Install Kit (Anchor Plate, Insulating Board & Blanket, 18-Gauge Galvannealed Steel Plate, Mortar)
- Accessory Package (Pizza Peel, Brush, Infrared Thermometer)
- Hearth Cooking Surface 26.5"x 22.5"
- Support weight minimum: 350 lbs
- Piece weight:
  - Dome ..... 210 lbs
  - Back Hearth ..... 50 lbs
  - Front Hearth ..... 25 lbs
  - Arch ..... 17 lbs

Bolt Dimensions:
4 Anchor plate bolts (ss 1/4-20 x 1/2")
2 Arch bolts (ss 1/4-20 x 1 3/4")
4 Door arch bolts (ss 1/4-20 x 2 1/2")

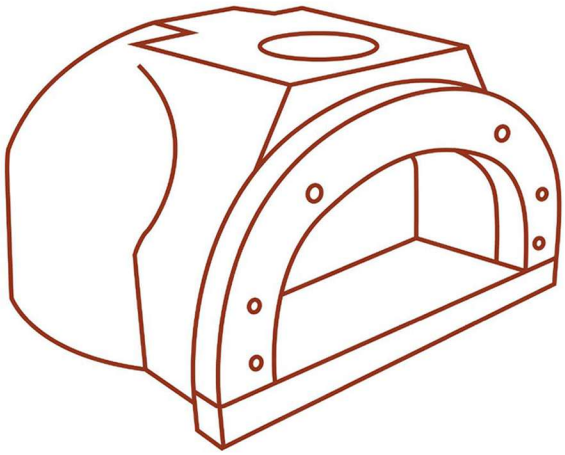

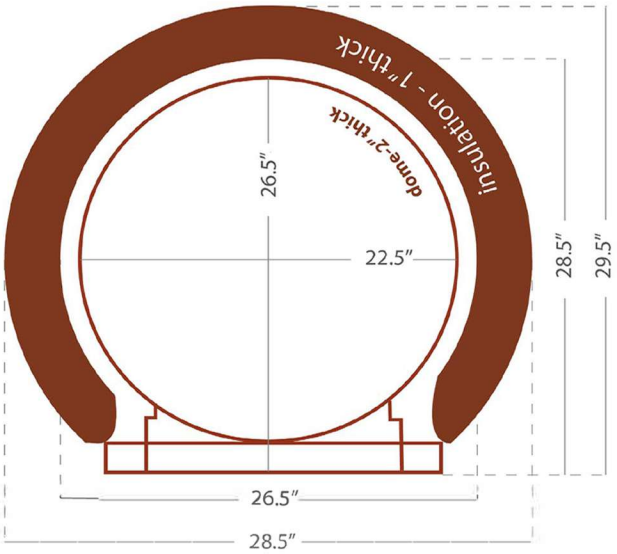

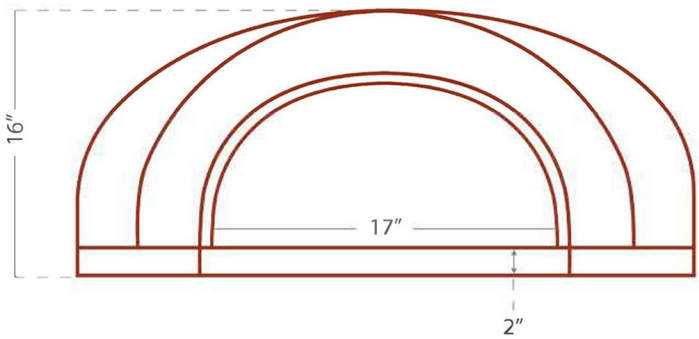

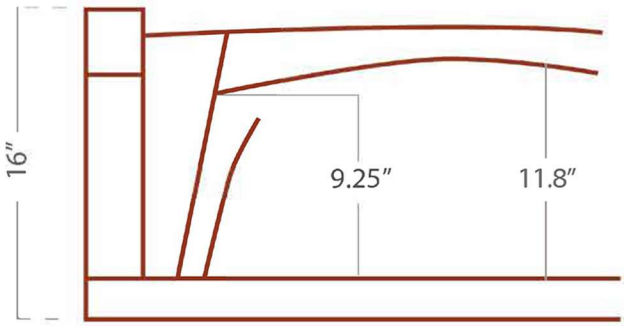

CHICAGO BRICK OVEN

CBO-500 Countertop Specifications

Base SKU CBO-O-CT-500

Details

- Preassembled
- Metal Insulating Hood
- Accessory Package (Pizza Peel, Brush, Infrared Thermometer)
- Hearth Cooking Surface 27"x 22"

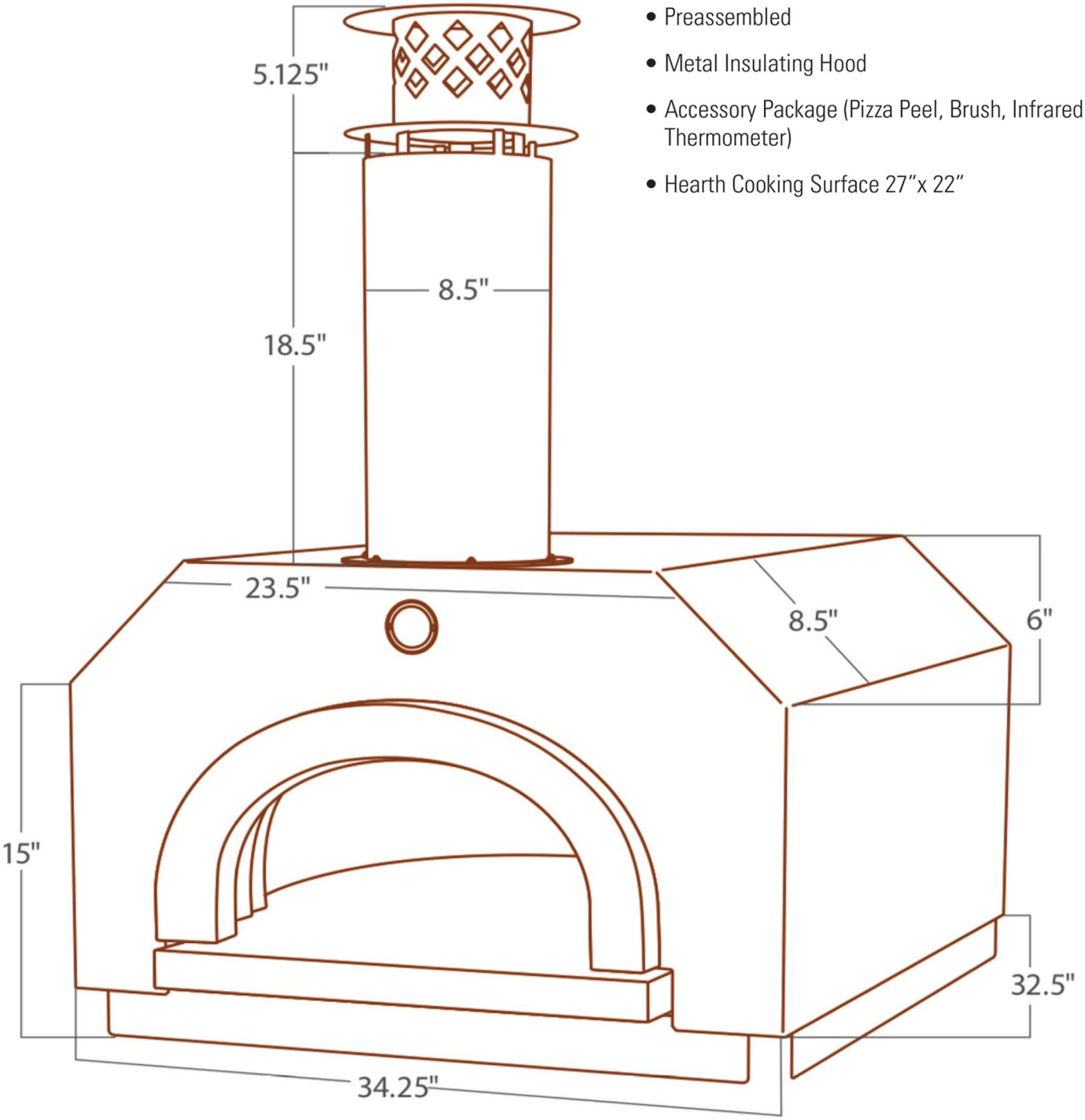

Minimum Support Weight: 450 lbs.
Flue Pipe Dimensions: 27.25" H x 22.25" W

CHICAGO BRICK OVEN

CBO-750 DIY KIT Specifications

UPC 705604321222 | SKU CBO-O-KIT-750

Details

- 6-Piece Oven (Dome, 3-piece Hearth, Arch, Decorative Door)
- Install Kit (Anchor Box with DuraVent #9441 6-Inch Anchor Plate, 6 Bolts, 3 Insulation Boards, Insulating Blanket, 18-Guage Galvannealed Steel Plate, Mortar, Installation Manual
- Accessory Package (Pizza Peel, Brush, Infrared Thermometer Gun)
- Hearth Cooking Surface 38.25"x 28"
- Support weight minimum: 480 lbs
- Piece weight:

  Dome ..... 299 lbs
  3 piece Hearth ..... 96 lbs
  Arch ..... 21 lbs

Bolt Dimensions:
2 Anchor plate bolts (ss 1/4-20 x 1/2")
2 Arch bolts (ss 1/4-20 x 2 1/2")

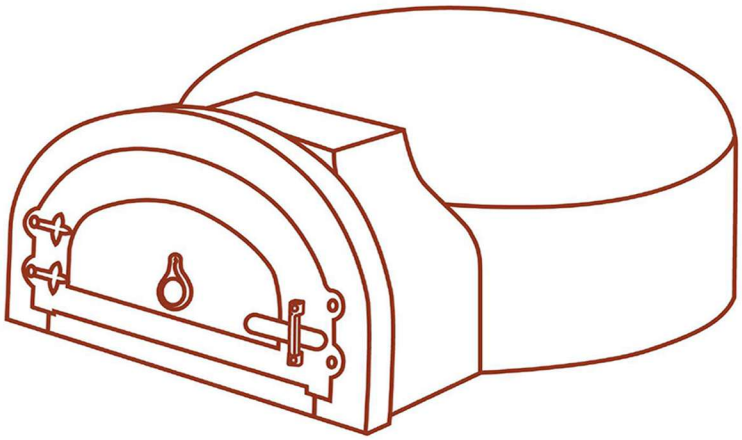

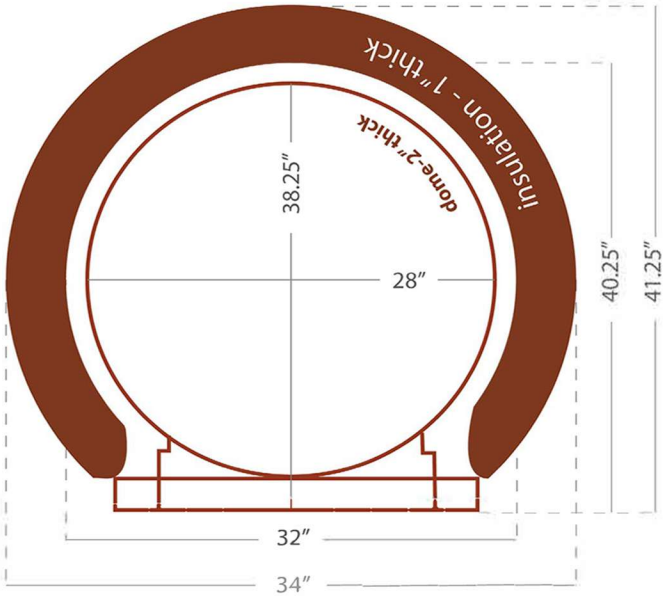

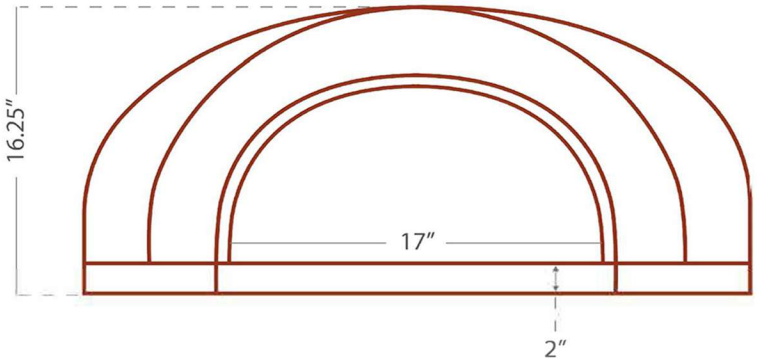

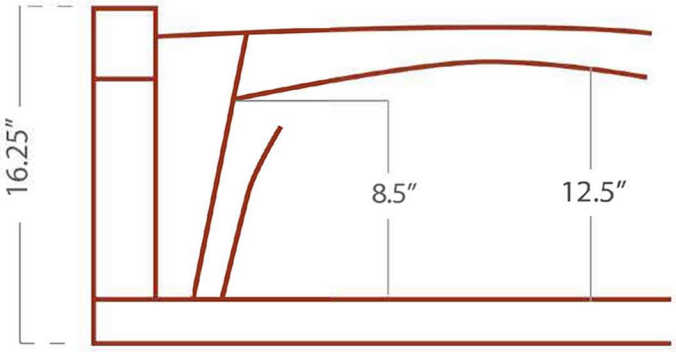

CHICAGO BRICK OVEN

CBO-750 Countertop Specifications

Base SKU CBO-O-CT-750

Details

- Preassembled
- Metal Insulating Hood
- Accessory Package (Pizza Peel, Brush, Infrared Thermometer)
- Hearth Cooking Surface 38" x 28"

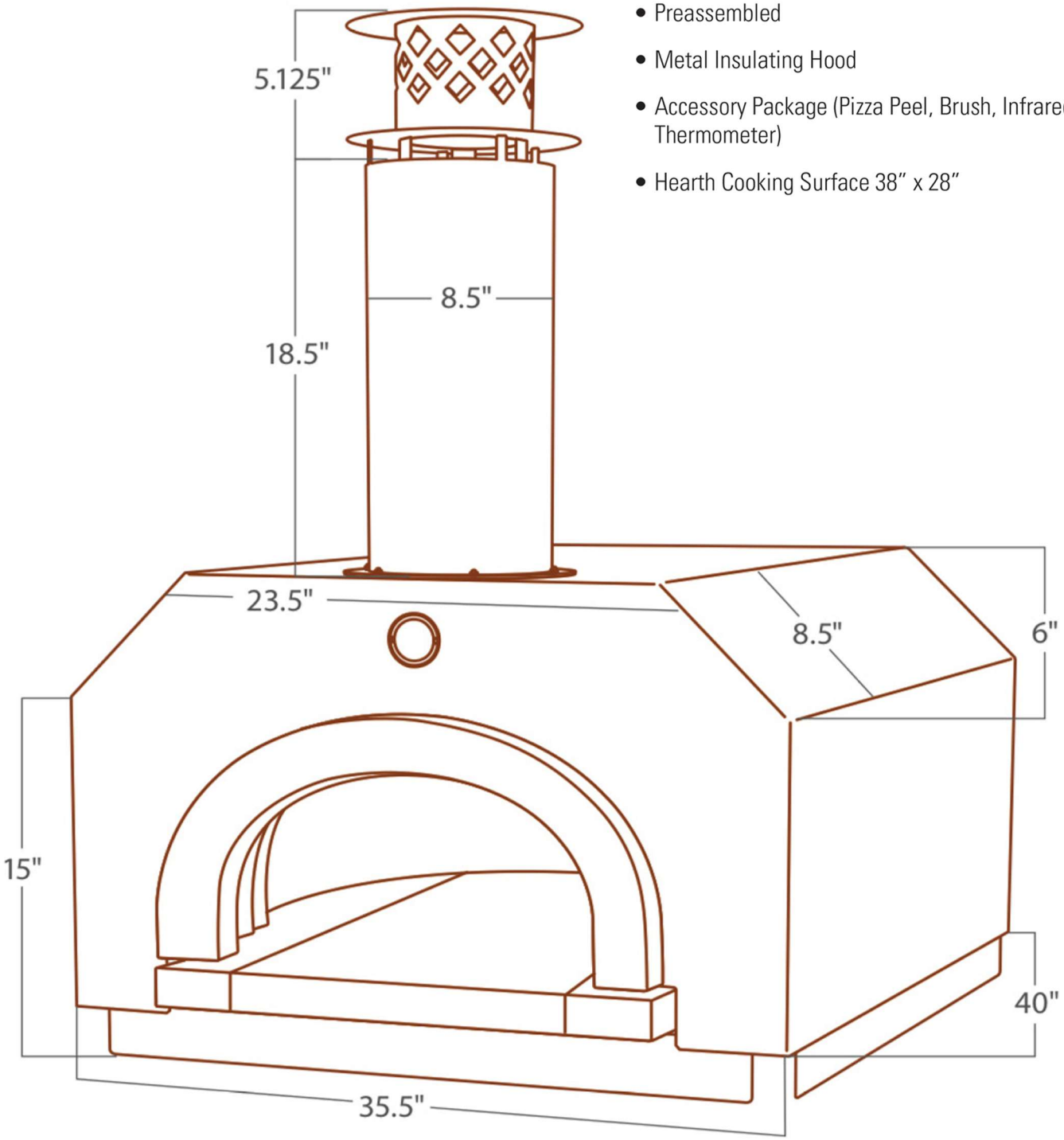

Minimum Support Weight: 625 lbs.
Flue Pipe Dimensions: 27.25" H x 22.25" W

CHICAGO BRICK OVEN

CBO-750 Mobile Specifications

Base SKU CBO-O-MBL-750

Details

- Preassembled
- Custom-Built Cart with Heavy-Duty Casters for High Portability
- Metal Insulating Hood
- Accessory Package (Pizza Peel, Brush, Infrared Thermometer)
- Hearth Cooking Surface 38”x 28”

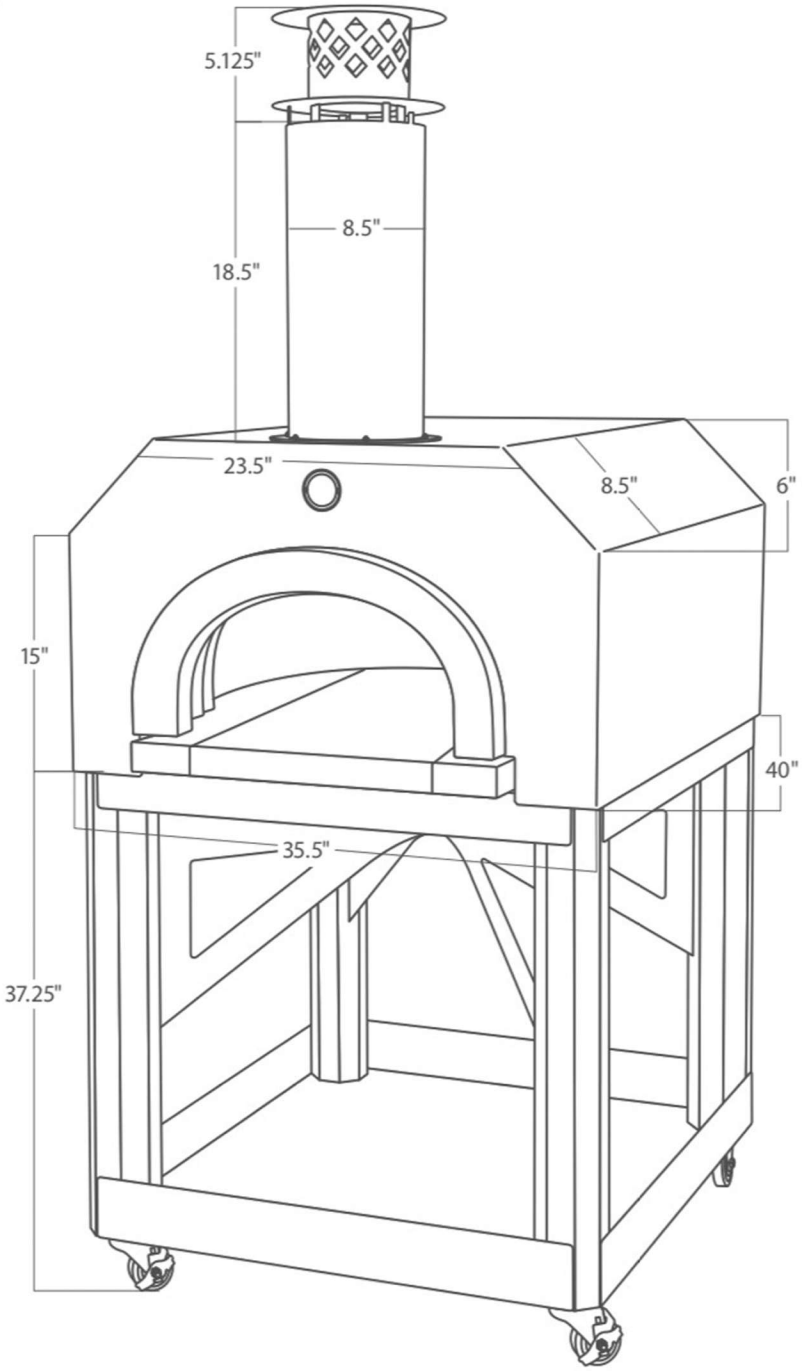

Oven with Cart Weight: 750 lbs.

CHICAGO BRICK OVEN

CBO-1000 DIY Kit Specifications

UPC 705604321246 | SKU CBO-O-KIT-1000

Details

- 7-Piece Oven (2-piece Dome, 3-piece Hearth, Arch, Removable Insulating Door)
- Install Kit (Anchor Plate, Insulating Board & Blanket, 14-Gauge Galvannealed Steel Plate, Mortar)
- Accessory Package (Brush, Infrared Thermometer Gun)
- Hearth Cooking Surface 53"x 39"
- Support weight minimum: 920 lbs
- Piece weight:
  2 Piece Dome ..... 562 lbs
  3 piece Hearth ..... 50 lbs
  Arch ..... 40 lbs

Bolt Dimensions:
4 Steel plate bolts (ss 1/4-20 x 1/2") 4
Anchor plate bolts (ss 1/4-20 x 1/2") 4
Arch bolts (ss 5/16-18 x 2 1/2")

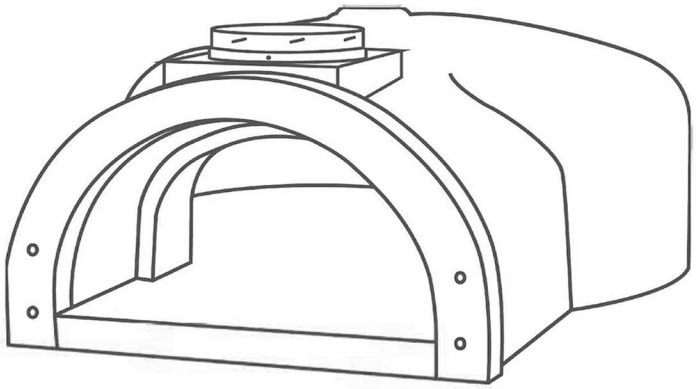

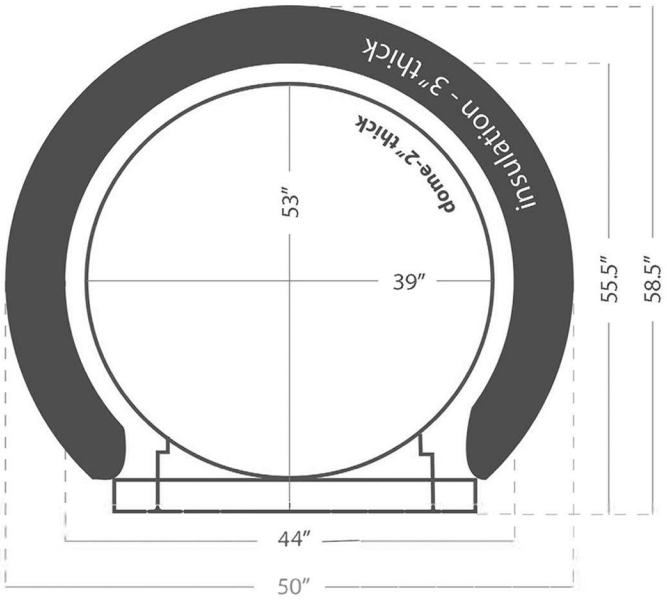

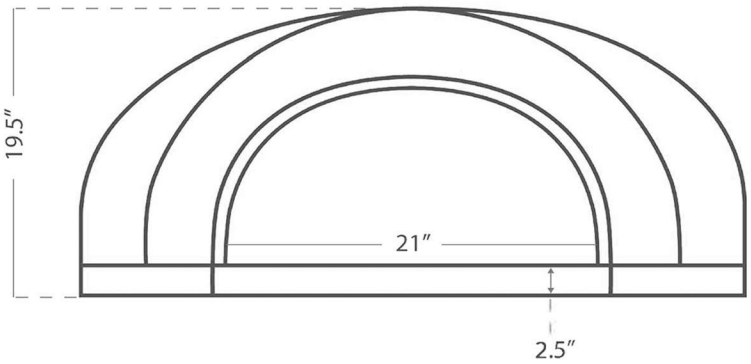

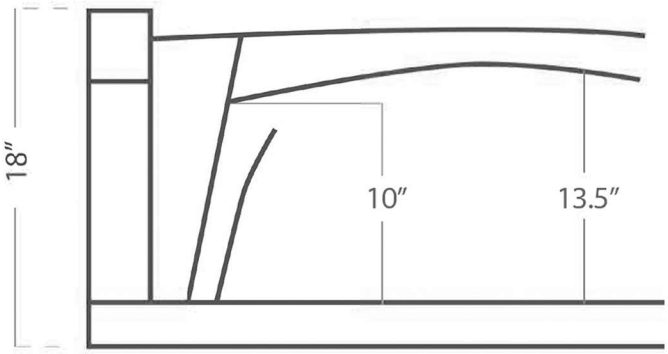

CHICAGO BRICK OVEN

CBO-750 Tailgater Specifications

Base SKU CBO-0-TAIL

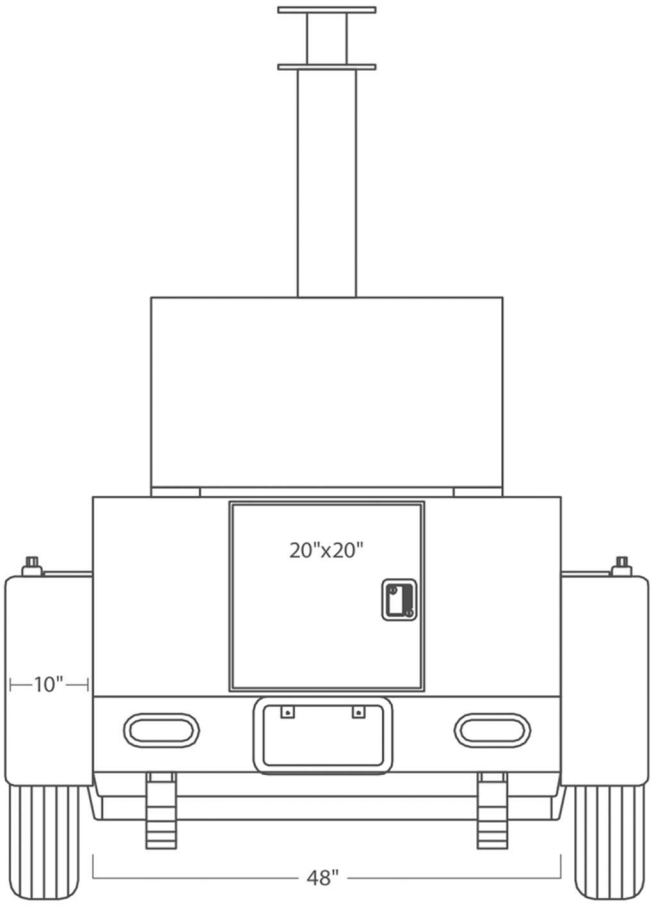

Trailer Internal Storage
Approximately 44" X 22" X 46"

Details

- 2-axle Aluminum Tailgater Pizza Oven Trailer
- Metal Insulating Hood
- Accessory Package (Pizza Peel, Brush, Infrared Thermometer)
- Hearth Cooking Surface 38"x 28"

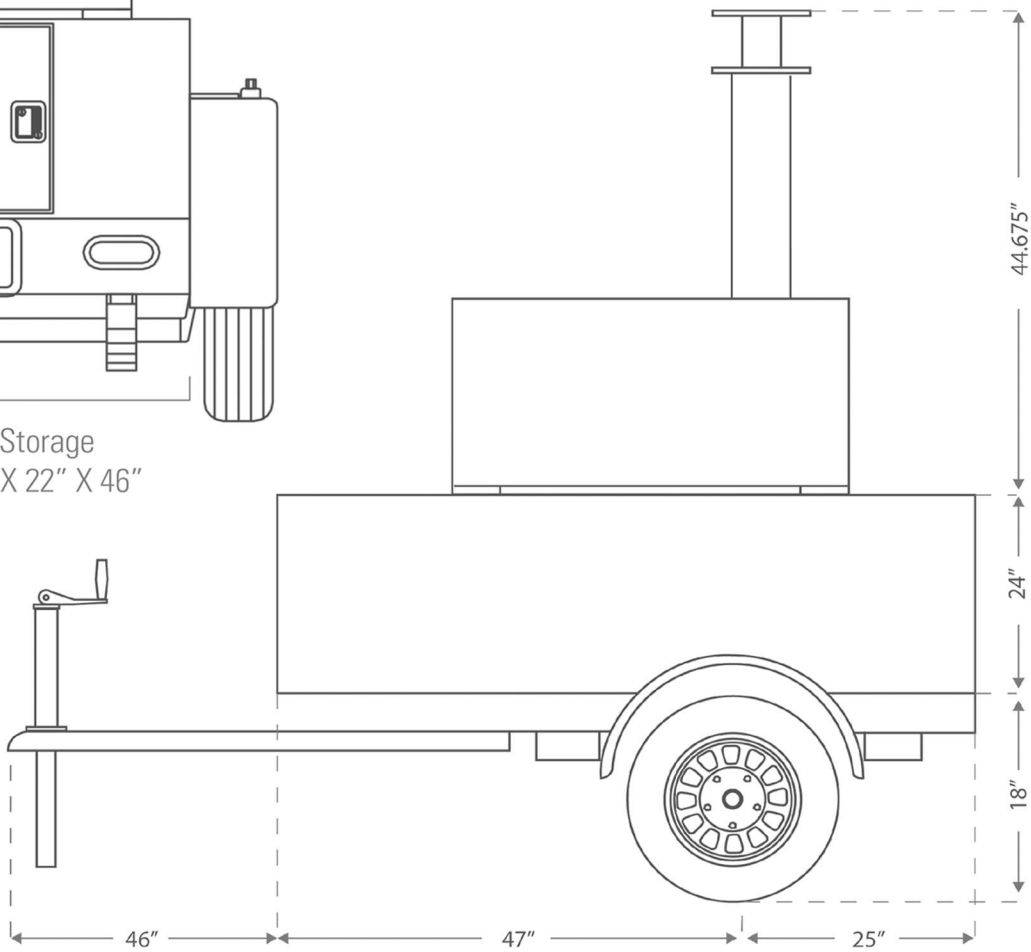

Oven with Trailer Weight: 1,073 lbs. Tailgater
Trailer Hitch Ball Size: 2"
Optimal ball height from ground: 15"

CHICAGO BRICK OVEN

CBO Oven Operating Instructions

TO PROTECT THE INTERIOR OF YOUR OVEN FROM RAIN AND OTHER MOISTURE, A PROTECTIVE RAIN CAP *MUST BE INSTALLED* ON TOP OF THE FLUE PIPE TO ENSURE THAT MOISTURE DOES NOT GET INTO YOUR OVEN.

Operating Instructions

Please follow these instructions exactly as written. Failure to follow instructions may cause permanent damage to your Oven and your warranty may be void.

Although your Oven may seem dry once you complete the installation process, there are small amounts of moisture pockets that need to work their way out. *If you build a large fire in your Oven from the onset, you could compromise your Oven's longevity and cooking efficiency, and can ultimately cause permanent damage, which may void the manufacturer's warranty.*

When lighting the first fire, keep the flames low so the moisture can be slowly released from the Oven and surrounding masonry work. This curing process should be conducted at a temperature as close to 212°F (100°C) as possible *(do not exceed that temperature)* over a 2- to 3-day period.

CAUTION: NEVER USE GASOLINE, GASOLINE-TYPE LANTERN FUEL, KEROSENE, CHARCOAL LIGHTER FLUID, OR SIMILAR LIQUIDS TO START OR FRESHEN UP A FIRE IN THIS OVEN. KEEP ALL SUCH LIQUIDS WELL AWAY FROM THE OVEN WHEN IT IS IN USE.

Note: *Refer to "Curing Your Oven" on page 26.*

A good suggestion is to build a fire in a separate location and place the coals into the Oven. You will generate heat without the flame and the Oven will cure as required.

Due to thermal expansion, small cracks will appear in the Dome or Hearth during the curing and cooking process. Do not worry; this is normal and the quality of your Oven will not be compromised.

After you have cured your Oven and are ready to start cooking, light a small fire and slowly build it up. The interior Dome of the Oven will at first turn black from the fire smoke. You will know the Oven temperature has reached 700°F when the inner walls turn from black to a whitish grey. This is a perfect temperature for many types of cooking. Use the included thermometer to check temperatures inside your Oven. You can just point and shoot to get a reading in any place in the Oven.

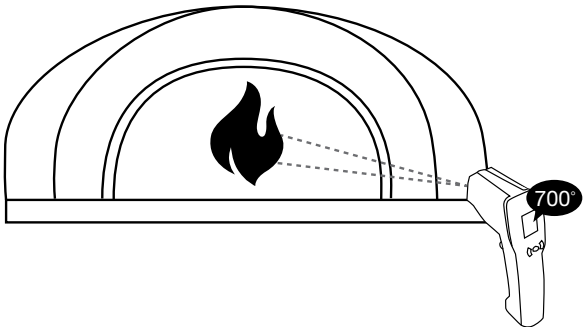

Note: *Please refer to the manufacturer's instructions for proper use of the thermometer that is included with your Oven.*

Note: *You should re-cure your Oven if it has not been used for an extended period of time or if the Oven has been exposed to excessive amounts of moisture.*

Note: *Your Oven is designed for burning solid, dried wood **only**. Do not burn scrap wood, compressed logs, coal or other materials. Failure to follow this instruction may damage your Oven and void your warranty.*

CAUTION: NEVER OBSTRUCT THE FLUE PIPE WHILE OPERATING THE OVEN.

CBO Oven Best Practices

Other Precautions and Instructions

- **LOCAL REGULATIONS ABOUT WOOD-BURNING EQUIPMENT SHOULD BE CONSULTED.**
- **CBO OVENS SHOULD BE INSTALLED BY A PROFESSIONAL OR SUITABLY QUALIFIED INDIVIDUAL.**
- **FOR INDOOR INSTALLATIONS, A SOURCE OF FRESH AIR INTO THE ROOM SHALL BE PROVIDED WHEN REQUIRED. CHECK WITH LOCAL BUILDING OFFICIALS REGARDING VENTILATION REQUIREMENTS.**
- **DO NOT USE PRODUCTS NOT SPECIFIED FOR USE WITH THIS OVEN.**
- **DO NOT INSTALL IN A MOBILE HOME.**
- **DO NOT CONNECT TO OR USE IN CONJUNCTION WITH ANY AIR DISTRIBUTION DUCTWORK. UNLESS SPECIFICALLY APPROVED FOR SUCH INSTALLATIONS.**
- **DO NOT USE CHEMICALS OR FLUIDS TO START THE FIRE.**
- **DO NOT BURN GARBAGE OR FLAMMABLE FLUIDS, SUCH AS GASOLINE, NAPHTHA OR ENGINE OIL.**
- **NEVER ALLOW ANYONE UNDER THE AGE OF 18 TO OPERATE THE OVEN.**
- Do not throw chunks of wood violently into the Oven.
- Each time you light a fire, make sure the fire covers as much of the Hearth surface as possible.
- Always use dry hard woods (dried for at least two years)! If you see moisture coming from the logs while they are on the fire, the wood is not dry. *Using wood that is not dry will cause the Oven to throw off a considerable amount of smoke and can also cause damage to the Oven because of the high moisture content.*
- The *first two times* you cook in your new Oven, cook something simple (for example, a pizza shell) *then throw it away* without actually eating what you have cooked. The third time, you can begin enjoying what you have cooked in your new Oven.
- Always pre-warm any cooking accessory (the CBO Grill, a cast iron pot, etc.) before you put it in the Oven. If you place a *cold* accessory on a *hot* Hearth, the thermal shock may cause the Hearth to crack. You can also add an Oven Rack so the pot or pan doesn't sit directly on the Hearth.
- The manufacturer is not responsible for eventual environmental damages, nuisance or smoke and carbon particles.
- In cold temperatures, bring your Oven up to temperature slowly.
- Never use frozen foods directly on the Hearth.
- Never use water, marinades or other liquids directly on the Hearth.
- With the exception of bread or pizza, always cook foods on or in a cooking accessory (the CBO Grill, a cast iron pot, etc.) to prevent spillage onto the Hearth surface.
- DO NOT OVER-FIRE! When flame spills out of the Oven, you are over-firing.
- A protective rain cap *must be installed* on top of the Flue Pipe to ensure that moisture does not get into your Oven.
- **Ash Disposal:** Brush out the ashes after each use with your CBO Wire Brush. Ashes should be placed in a metal container with a tight-fitting lid. The closed container of ashes should be placed on a noncombustible floor or on the ground, well away from all combustible materials, pending final disposal. When the ashes are disposed of by burial in soil or otherwise locally dispersed, they should be kept in the closed container until all cinders have thoroughly cooled.

Regular Maintenance

Your CBO Oven will last years if you follow these simple, regular maintenance tips:

- Never use any cleaning products inside the Oven! Heat the Oven properly to clean it.
- Clean the splash zone around the mouth of the Oven with hot water and soap after each use.
- Only the CBO-1000 model comes with a removable Insulating Door made of stainless steel that requires no maintenance. You can purchase the Insulating Door for the CBO 750 & 500 models from the CBO online store.
- The CBO-500 and CBO-750 models come with a cast aluminum Door that is primarily for decorative purposes. Never close the Decorative Door during oven operation.
- Lubricate the Decorative Door hinges on a regular basis. When the Door shows signs of wear, rub it lightly with a piece of steel wool and repaint the Door with black Stove Pipe Spray Paint available at your local hardware store.
- **Creosote Formation and the Need for Removal.** When wood is burned slowly, it produces tar and other organic vapors that combine with expelled moisture to form creosote. The creosote vapors condense in a relatively cool Oven Flue and Exhaust Hood of a slow-burning fire. As a result, creosote residue accumulates on the Flue Lining and Exhaust Hood. When ignited, this creosote makes an extremely hot fire. To reduce the risk of a creosote fire, inspect the Flue Connection/Anchor Plate on a regular basis. Make sure it is free from any buildup. If you have buildup, use a wire brush to clean it. Contact your local municipal or provincial fire authority for information about how to handle a chimney fire. Have a clearly understood plan for how to handle a chimney fire.
- Inspect the Flue Pipe on a regular basis. Make sure it is in good repair and is seated securely into the Flue Connection/ Anchor Plate.
- Inspect your Flue Cap to ensure there is no buildup blocking the flow of air. If you have any buildup, you can use a wire brush to clean it.
- Touch-up the mortar around the Arch to maintain a nice finished look. You can use any refractory mortar found at your local hardware store.
- If you use the CBO Metal Shroud in your install, cover the Shroud with an inexpensive grill cover to help protect the Oven from the elements when not in use. The Oven must be cool to the touch before it can be covered.
- When using any CBO accessory, please do not allow any type of liquid to touch the Hearth or Dome. For example: When cooking steak on the Grill Grate, you need to place a Griddle underneath the Grill Grate to "catch" the drippings.

If you have any questions about the use and care of your CBO Oven, please send us an email to info@chicagobrickoven.com

Customized Enclosure Designs

However you plan to install your CBO Oven—as a stand-alone unit or as part of a complete outdoor kitchen—and whatever your material preference—stone, brick, stucco, etc.—your design choices for creating a customized enclosure are as limitless as your imagination.

Here are just a few examples of how other homeowners have customized their CBO wood burning ovens and created their ultimate outdoor and indoor cooking, dining and entertaining spaces.

Visit chicagobrickoven.com and view our gallery for more inspiration.

Curing Your Oven

Although your Oven may seem dry once you complete the installation process, there are small amounts of moisture pockets that need to work their way out.

The initial fire must be started slowly. When lighting the first fire, keep the flames low so the moisture can be slowly released from the Oven and the surrounding masonry work. *If you build a large fire in your Oven from the onset, you could compromise your Oven's longevity and cooking efficiency, and can ultimately cause permanent damage, which may void the manufacturer's warranty.*

This curing process should be conducted at a temperature as close to 212°F (100°C) as possible (*do not exceed this temperature*) over a 2- to 3-day period. Exposing your new Oven to this temperature over a few days will cause all the moisture to evaporate so that your Oven properly "cures."

Note: *Due to thermal expansion, small cracks may appear in the Dome or Hearth during the curing process. Don't worry; this is normal and the quality of your Oven will not be compromised.*

Another method of curing your new Oven is to build a fire in a separate location. Then take the coals and place them into the Oven. You'll generate heat without the flame and the Oven will cure as required. Some new owners find this method a much easier way to cure the Oven and ensure the temperature doesn't get too hot.

Note: *You should re-cure your Oven if it has not been used for an extended period of time or if the Oven has been exposed to excessive amounts of moisture.*

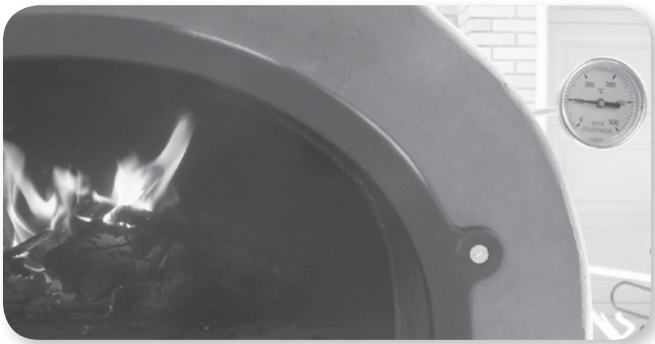

Firing Your Oven

A Once you've properly cured your Oven, you're ready to fire it for cooking.

B Always start with dry kindling placed 10 inches from the front of the Oven.

CAUTION: NEVER USE CHEMICALS OR STARTER FLUIDS; YOU WILL NOT NEED THEM.

C Once the fire is going, add small pieces of wood to build the fire. You want to raise the temperature slowly, so avoid building a huge fire that pours out of the mouth of the Oven.

D We recommend adding large chunks of wood to the fire once it's going strong. Add these chunks and start moving the fire to the back of the Oven—about 20 minutes after the fire is going.

E You'll notice the Oven Dome turning black. As the temperatures rise and more heat is stored in the Dome, it will turn a whitish grey. Your goal is to heat the Oven in a way that the entire Dome turns whitish grey.

How the Oven Works

WOOD BURNING BRICK OVENS ARE SPECIALLY DESIGNED TO TAKE FULL ADVANTAGE OF ALL THREE COOKING METHODS—RADIANT HEAT, CONVECTION AND CONDUCTION.

FlameRoll™

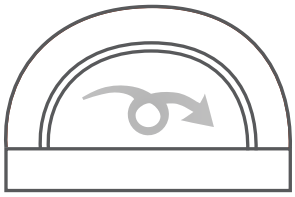

Only our proprietary low-dome construction creates the perfect *FlameRoll*™ from front to back. In this unique cooking method, the vent pulls the flame horizontally across the top of the Dome and then vertically back down the side. Not only does this "funnel effect" create higher temperatures for superior cooking, the rolling flames being drawn across the Dome are aesthetically beautiful, giving you a full wood-fired cooking experience. In competitive high-dome brick ovens, the flames get trapped in the upper portion of the Dome, too far away from the food to properly cook it.

Radiant Heat

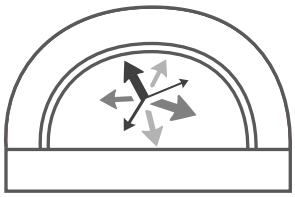

Radiant heat comes from a direct source. In a wood-fired oven, radiant heat can come from two direct sources—the fire and the heat that's stored in the Oven walls and Hearth. Radiant heat is very even and will cook food from all directions. The special shape of your CBO Oven reduces all cold spots and ensures that the stored radiant heat is used efficiently. By slowly building the Oven's stored heat, you'll be able to take advantage of the radiant heat for longer periods of time. You'll also be able to use radiant heat by leaving a fire or hot coals in the Oven. Use this method of cooking if you want high heat and a short cooking time, especially for pizzas.

Convection

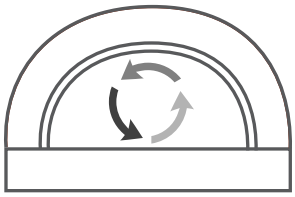

Convection is heated air circulating in an Oven. Cool air is drawn into the Oven through the access hole (when the exterior door is closed) or the Oven opening (when the Door is open). As the cool air is drawn into the Oven, it's rapidly heated by the fire and the stored heat in the Oven. This heated air passes over the food evenly. As the air continues to heat, it passes to the back of the Oven and rises. The heated air now again passes over the food on the way out of the Oven Flue. This draw causes a steady flow of heat to pass over the food, causing convection.

You can also take advantage of convection with closed-door cooking. For example, when you add cool dough to the hot Oven, convection will take place through the moisture in the dough. As the hot air comes in contact with the dough, the heat is transferred. The air comes off the dough cooler, and then is heated again by the Oven.

Conduction

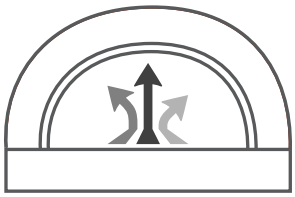

The third method of cooking in your wood-fired brick oven is through conduction. Conduction occurs when a cooler object comes in contact with a warmer object and heat is transferred. The amount of conduction that takes place depends on two things—the temperature difference of the two items and the material (if any) that's between them. For example, you may want to sear a steak by placing a cast iron grill in a very hot Oven. *Make sure any cooking device you put into your Oven is at 75°F or above to avoid thermal shock to the Hearth*. Once the grill is at temperature, you'll place room-temperature steaks on the grill. This contact will cause conduction to take place and sear the steaks. Another example of conduction is putting a pizza directly on the Oven's heated Hearth. The heat transferred from the Hearth to the pizza will cause an excellent crust to form.

Cooking in Your Oven

ONCE THE OVEN HAS BEEN HEATED TO THE POINT THE ENTIRE DOME HAS TURNED A WHITISH GREY, YOU'RE READY TO COOK USING EITHER THE OPEN-DOOR OR CLOSED-DOOR METHOD.

Open-Door Cooking

Open-door cooking is used to cook pizzas and other foods that require medium to high temperatures. Keep the fire going in the back of the Oven. Sweep out the front of the Hearth with a wire brush and you're ready to cook. The Oven will become hot enough and the small fire on top will generate radiant heat. For pizzas, the purpose of the flame is to melt the cheese and crisp the top.

Closed-Door Cooking

Spread the fire throughout the Oven. You will store heat in the Hearth and Dome by burning your fire hot for at least one hour. The longer you burn your fire, the more heat will be stored in the Hearth and Dome and the longer you'll be able to cook.

The entire Dome of the Oven should turn a whitish grey. Once the fire has burned down, remove all coals and ashes into your ashbin. Sweep the Hearth and you're ready to go. Load your Oven with breads, roasts or casseroles and seal the Oven with the Insulating Door.

Note: *Closed-door cooking should only be done at temperatures below 400°F and without a fire in the chamber. Never use the Decorative Door for closed-door cooking. Close the Oven by inserting the Insulating Door that comes with the CBO-1000 model (optional for the CBO-750 and CBO-500 model).*

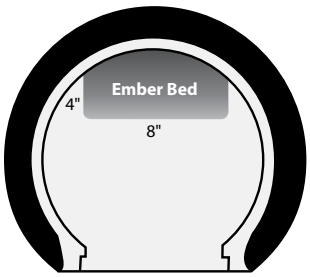

Maximize Your 'Real Estate'

After you have fired your Oven to the proper temperature, it's time to maximize your cooking "real estate." Do this by removing the ashes and keeping just enough of the embers to create a small ember bed—about 4 inches wide by 8 inches long—on the Hearth at the very back of your Oven.

Using Flavored Wood

JUST IMAGINE THE AROMA AND MOUTHWATERING TASTE OF APPLE WOOD TURKEY, ORANGE WOOD DUCK OR MAPLE WOOD STEAK!

To maximize your cooking experience, there's nothing better than using a fine cooking wood—alder, apple, apricot, cherry, grape, hickory, lemon, maple, mesquite, nectarine, orange, peach, pear, pecan, plum, white oak.

Which Kind of Wood to Use

Hard, dry, aged wood burns hotter and cooks faster. The best burning hardwoods are arbor, ash, beech, bower, maple and oak. Soft woods, such as linden or poplar, create about 50% less heat than oak. The energy that comes from combustion doesn't depend on the type of wood you use, but on its degree of dryness. The ideal stacking period for wood is six months in the open and two years (up to three years for oak) in a dry, protected spot. The wood can also be dried in the oven after you make sure there are no coals or embers left, so the wood will not ignite.

Which Wood *Not* to Use

Resinous and treated woods are not recommended and can be dangerous to your health. Waste wood should also not be used because your wood burning oven is a cooking instrument.

Frequently Asked Questions

What besides pizza can I cook in my wood burning brick oven?

There is no limit to what you can cook in your CBO wood-fired brick oven. Anything you can cook in your home oven, you can cook in your CBO Oven—whole turkeys, bread, grinders, chicken, steaks, chops, vegetables, stews, empanadas, desserts and more.

When using any CBO accessory, *please do not allow* any type of liquid to touch the Hearth or Dome. For example: When cooking steak on the Grill Grate, you need to place a Griddle underneath the Grill Grate to "catch" the drippings.

Can the oven be used in all climates?

Yes, you can use the Oven year-round. The structure you build around the Oven must keep the elements out and the Oven dry.

Can I install my own oven?

Yes, it can be a do-it-yourself project. You'll need to have some skill in concrete and masonry in order to keep your Oven safe from the elements. (Check out our Assembly Instructions section for more details.)

Why would I use two different doors with my oven?

Most of our competitors have either no doors or just one. The CBO-500 and CBO-750 models come with a Decorative Door to seal off the Oven and keep the elements out when it's not in use. The CBO-1000 model comes with an Insulating Door for when you want to control the internal temperature and hold it for long periods of time, especially when you're baking. You can purchase the Insulating Door, to use with the CBO-750 model or CBO-500 model, from the CBO online store. We recommend it for low-temperature baking and cooking.

Is the oven safe around children?

Any time you have fire there is some potential danger. The outside of the Oven will be hot to touch; just how hot depends on your design and use of insulation. If installed properly, the Oven should not pose any more danger than a BBQ grill.

How long does it take to heat the oven?

We recommend building a small fire and slowly adding to it to bring up the temperature of the Oven. This process can take an hour or more, depending on the size of your Oven. Once it's hot, you can use your Oven for hours.

What types of ovens are better—refractory concrete, clay or brick?

We're partial to refractory and brick ovens because of their look and durability. The first oven I owned was made of clay and in the first harsh Chicago winter, it cracked! Refractory ovens are more dependable, but in most cases the refractory has not been fired like CBO refractory ovens or CBO brick ovens.

How much do the ovens weigh?

The raw weight of the CBO-500 Oven is 350 lbs. The CBO-750 Oven weighs 480 lbs. The CBO-1000 Oven weighs 920 lbs. Every CBO Oven requires a properly poured foundation.

How do I shut down my oven?

Let the flames burn down, and when the Oven cools down to below 200°F it is safe to close the Decorative Door on the CBO-500 and CBO-750 models. The Oven will slowly cool down over several hours.

Can I put a gas-assist in a brick oven?

If you're interested in quick heating, we recommend that you look into our new hybrid brick oven, which serves as both a wood burning oven and a gas oven. The CBO Hybrid features our CBO-750 model and is certified to UL and ANSI Standards. (*A gas-assist cannot be covered under the CBO warranty.*)

Can I have a CBO Oven indoors?

Yes. For Indoor Installation, a CBO Oven certified to UL Standards is required. You must check your local building codes to find out all of the permits, restrictions and inspection requirements. You must also install and use the Oven only in accordance with Chicago Brick Oven's installation and operating instructions (or equivalent).

Do I need a venting pipe on my oven?

Yes. You will need to install a Venting Pipe that meets your local building code. The Pipe serves as an airflow regulator, which is essential for controlling the temperature and convection. Your Venting Pipe should always be a minimum of 24 inches high.

Have more questions? Give us a call at +1 (877) 730-7758 or email us support@chicagobrickoven.com.

Limited Warranty

Chicago Brick Oven, a manufacturer of wood-fired ovens, warrants the products to be free from defects in materials and workmanship for a period of one (1) year from the date of shipment.

Local regulations about wood burning equipment should be consulted.

Qualifications to the Warranty

The complete Warranty is further subject to the following qualifications:

1. The oven must be installed in accordance with CBO installation instructions and local building codes.
2. Moisture can cause significant damage to the oven/hearth. Therefore, the enclosure/shroud (stone, brick, stucco, etc.) that surrounds the oven/hearth must be sealed and waterproof. Failure to do so will void this Warranty.
3. The oven is subjected to normal use, including burning such natural wood fuels as non-treated wood. Fuel products with abnormal burning characteristics including, but not limited to, fuel such as driftwood, coal or plywood and wood products using a binder, may burn at excessive temperatures and may cause damage to the oven or may cause it to function improperly. CBO does not warrant the oven when such fuels have been used.
4. This Warranty does not apply to normal wear and tear. Note that all refractory materials will form small cracks over time. These cracks will not affect the performance of the oven.
5. This Warranty does not apply to any cracking caused by over-firing or the failure to follow a proper curing schedule as outlined in the User Manual supplied with your oven or found online at www.chicagobrickoven.com.
6. All CBO ovens are shipped FOB Factory by a third-party carrier. It is the recipient's responsibility to inspect the product(s) for damage before accepting/signing for the delivery. Damages incurred during shipment must be addressed with the carrier at the time of delivery.
7. A certain amount of pitting naturally occurs during the vibration and screeding (leveling and smoothing) techniques used in manufacturing refractory precast shapes. Also, due to the blending of minerals used to create refractory and the high temperatures used to kiln-fire the oven's dome, hearth and arch, some color variation may occur. These cosmetic variations are not detrimental to the function of the oven.
8. Any alterations made to prefabricated ovens *without written approval from Chicago Brick Oven,* will void Warranty.

Limitation on Liability

It is expressly agreed and understood that CBO's sole obligation and purchaser's exclusive remedy under this Warranty, under any other warranty, expressed or implied, otherwise, shall be limited to replacement, repair, or refund, as specified above. In no event shall CBO be responsible for any incidental or consequential damages caused by defects in its products, whether such damage occurs or is discovered before or after replacement or repair, and whether or not such damage is caused by CBO's negligence. Some states do not allow the exclusion or limitation of incidental or consequential damages, so the above limitation or exclusion may not apply to you. The duration of any implied warranty with respect to this oven is limited to the duration of the foregoing warranty. Some states do not allow limitations on how long an implied warranty lasts, so the above may not apply to you.

Investigation of Claims Against Warranty

CBO reserves the right to investigate any and all claims against this Warranty and to decide upon the method of settlement.

Dealers Have No Authority to Alter this Warranty

CBO employees and dealers have no authority to make any warranties, nor to authorize any remedies in addition to or inconsistent with those stated above.

How to Register a Claim Against Warranty

In order for any claim under this Warranty to be valid, CBO must be notified of the claimed defect in writing (support@chicagobrickoven.com) or by telephone (877.730.7758) to CBO. Claims against this Warranty in writing should include the date of installation and a description of the defect.

For more information, visit

www.chicagobrickoven.com

Chicago Brick Oven
1020 Davey Road
Suite 300
Woodridge, IL 60517
(877) 730-7758

© 2018 Chicago Brick Oven. All rights reserved.

Ver 091519