ITEM	QTY	DESCRIPTION	MATL
1	1	MODEL BES-15P-T-X "S" CONFIGURATION OVERLAPPING BUCKET ELEVATOR	
2	1	SYNTRON FEEDER, MODEL BF-2, WITH 14"x2x30" S.S. TRAY.	
3	1	DEAMCO ELECTRICAL CONTROL PANEL TO OPERATE UNITS #1 & #2	

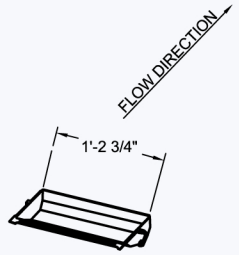

MODEL BES-15P "S" CONFIGURATION
(POLYPROPYLENE) BUCKET

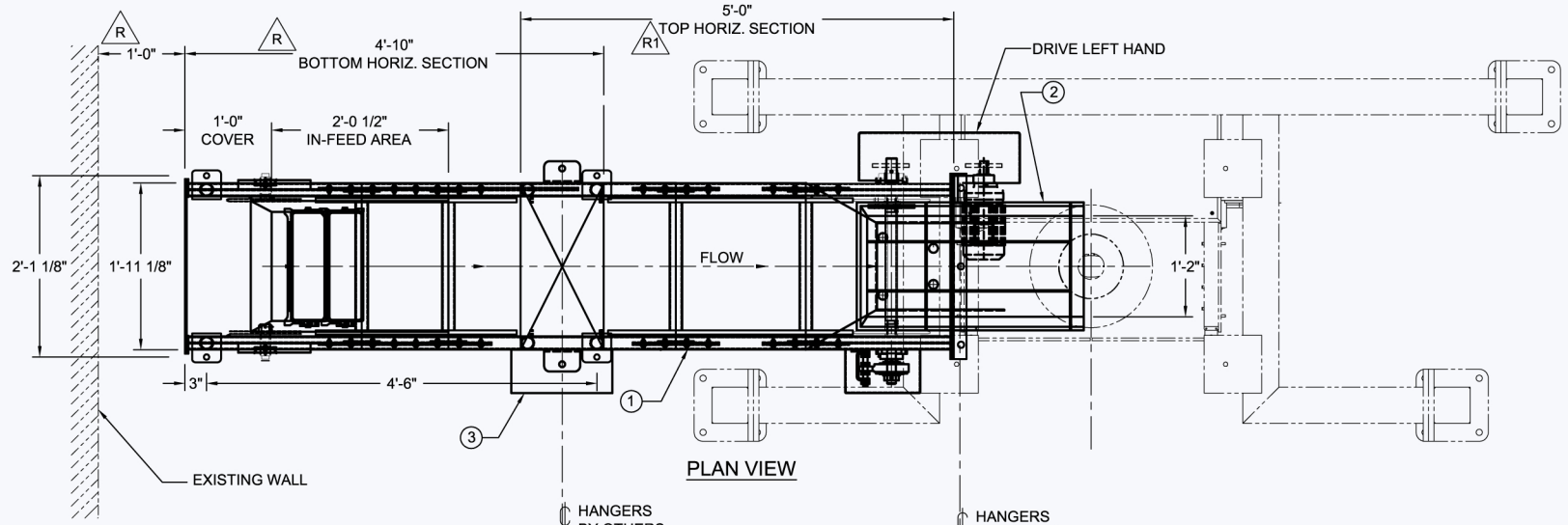

PLAN VIEW

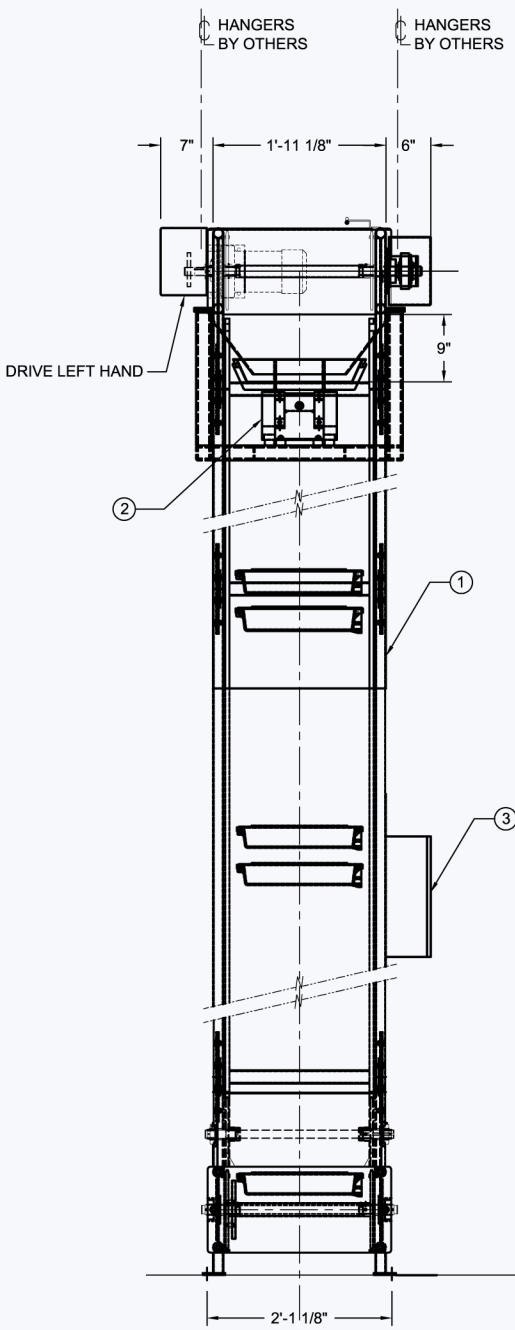

VIEW "A-A"

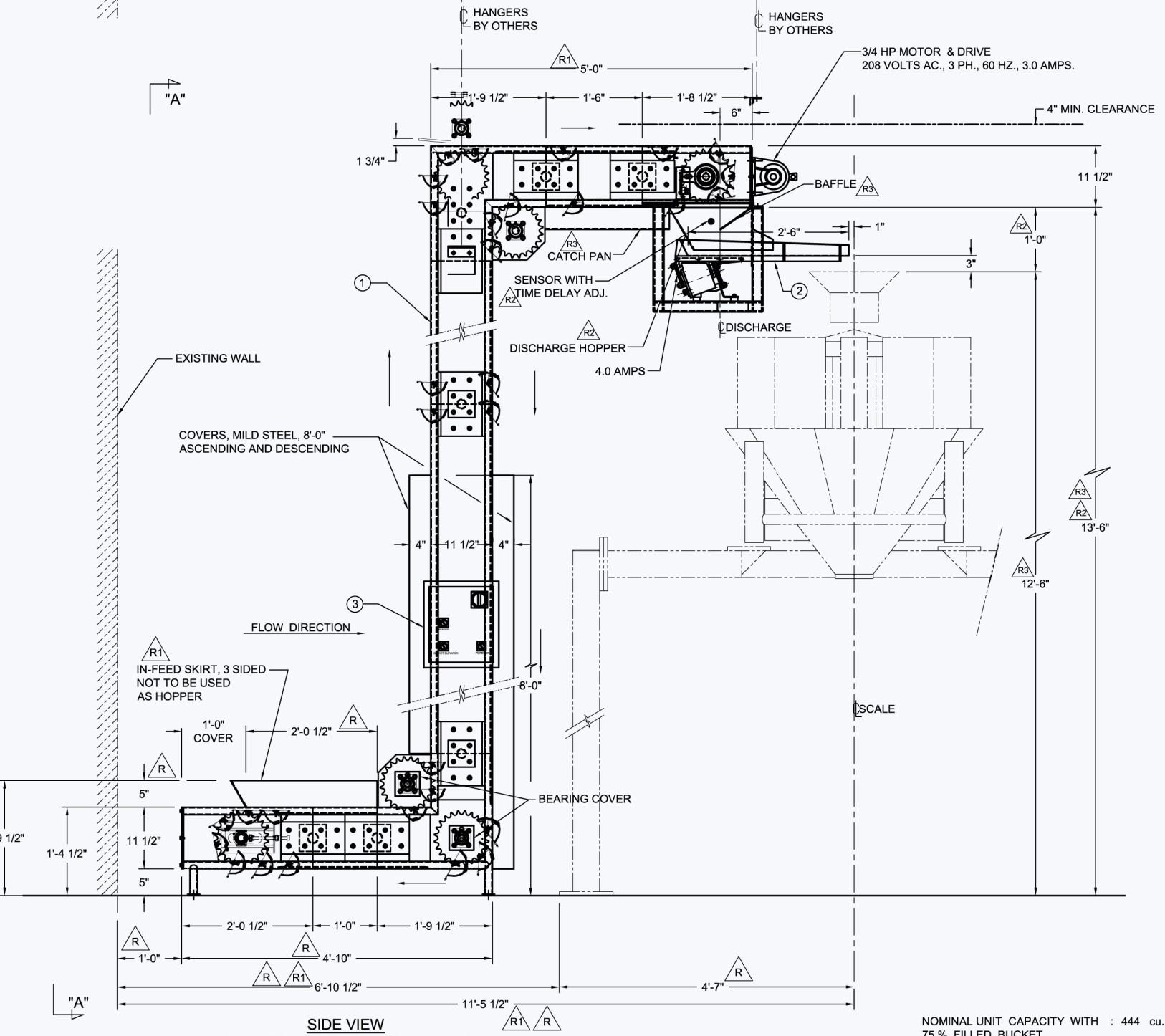

SIDE VIEW
MODEL BES-15P-T-X, "S" CONFIGURATION
OVERLAPPING BUCKET ELEVATOR
UNIT # 01, SERIAL #12434BES-NBG-01

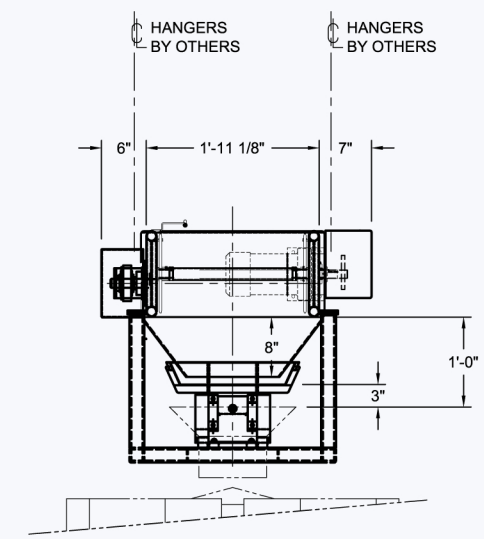

FRONT VIEW

NOTES:

1- FRAME, SANITARY, MILD STEEL, TUBULAR CONSTRUCTION.
2- PAINT, DEAMCO STANDARD WHITE PAINT, FOOD GRADE.
3- BUCKETS, HI-IMPACT (POLYPROPYLENE) PLASTIC BUCKETS.
4- CARRIER CHAIN (C2052), CARBON STEEL WITH CARBON STEEL ROLLERS.
5- COVERS, MILD STEEL, ASCENDING AND DESCENDING.
6- TEFC MOTOR AND DRIVE, 208 VOLTS A.C., 3 PHASE, 60 HERTZ.

SIGN & RETURN TO DEAMCO

CUSTOMER'S APPROVAL
BY:

DATE:

NOMINAL UNIT CAPACITY WITH : 444 cu. ft / hr
75 % FILLED BUCKET

ALL DIMENSIONS AND SPECIFICATIONS ARE APPROXIMATE AND SUBJECT TO CHANGE.

REV.	SYMBOL	DESCRIPTION	DATE	BY	CHECKED
3	R3	DIM'S: 12'-6" WAS 12'-3" & 13'-6" WAS 13'-3", ADDED DISCHARGE BAFFLE AND CATCH PAN.	04-23-09	B.B.	A.H.
2	R2	DIM'S: 1'-0" WAS 1'-9" & 13'-3" WAS 14'-0", REVISED DISCHARGE HOPPER, ADDED SENSOR.	04-22-09	B.B.	A.H.
1	R1	DIM'S: 5'-0" WAS 6'-0", 6'-10 1/2" WAS 7'-10 1/2" & 11'-5 1/2" WAS 12'-5 1/2", REVISED IN-FEED SKIRT.	04-14-09	B.B.	A.H.
0	R	DIM'S: 4'-10" WAS 3'-10" , 2'-0 1/2" WAS 1'-0 1/2" & 5" WAS 1 1/2", ADDED DIM'S. 4'-7", 7'-10 1/2", 1'-0" & 12'-5 1/2".	04-02-09	B.B.	A.H.

deamco corp.
DESIGN , ENGINEERING & ASSOCIATED MANUFACTURING COMPANY
6520 E. Washington Boulevard, Los Angeles (Commerce), CA 90040
PHONE: (323) 890-1190 FAX: (323) 890-1139

TO

FOR

TITLE
MODEL BES-15P-T-X, "S" CONFIG.
OVERLAPPING BUCKET ELEVATOR
UNIT #01
SERIAL #12434BES-NBG-01

QUOTATION No.	JOB No.	DRAWING No.	REV.
Q-3391-0309-R	12434	12434-01-TS15-A01	3

PURCHASE ORDER No.	DRAWN	CHECKED	DATE	SCALE	SHEET
SIGNED QUOTE	B.B.	A.H.	03-24-09	1"=1'-0"	1 OF 1

NOTICE: THIS IS THE EXCLUSIVE PROPERTY OF DEAMCO CORPORATION AND IS NOT TO BE REPRODUCED IN PRINT OR CONSTRUCTION WITHOUT WRITTEN AUTHORIZATION FROM DEAMCO.

R-06-16-01