LED WALLMAX LARGE WALL PACK: FULL CUTOFF

WPCL SERIES

WPCL40A model WPCL55A model

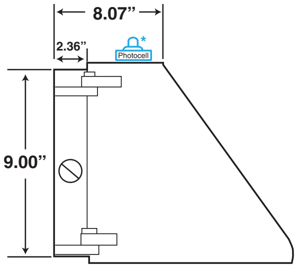

*Option: Photocell

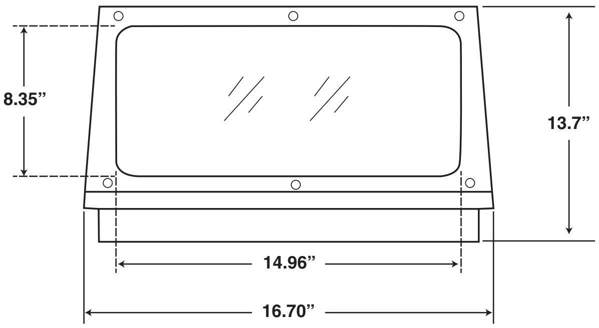

PRODUCT DESCRIPTION:

MaxLite’s Wall Packs meet full cut off criteria established by the IESNA. Fixture can mount to electrical box or direct to wall.

FEATURES:

- Replaces up to 250 Watt Metal Halide
- CCT 5000K
- Self-contained driver
- Maintenance free; no UV
- Dusk To Dawn / Occupancy sensor compatible
- Can mount on electrical box or direct to wall
- LM-79/80 data available
- 5 Year Limited Warranty
- 20W and 30W models available

CONTROLS:

120VAC/208-277VAC Photocontrol: Voltage-specific photocontrols power the fixture when light levels reach 20 lux or below, and turn it off at 30 lux or higher. Operating temperature of -30°F-120°F. Photocell mounted externally.

Motion/Daylight Sensor: 0-10V passive infrared-based motion sensor with integral photocontrol, allowing for two output states: 100% or 10/20/30/40/50% output. Detection area, hold time, daylight threshold, and dimming level can be adjusted via the accessible push-button. The operating temperature of the sensor is -40°F- 161°F. At its maximum mounting height of 20 feet, the sensor can detect motion up to 35 feet away. The sensor is mounted externally and, embedded within fixture backhousing. For 24-hour operation where luminaire is always powered on, please combine MS4 with PC12/PC27 to turn fixture off during daylight hours.

PHOTOMETRICS:

All .IES files available online. Please see page 3 for Iso-footcandle layouts.

MODEL SELECTION (Full list of order codes on pg. 2) Typical order example: WPCL40AU50BMS4

WPCL				50		
FAMILY	**NOMINAL POWER, EQUIVALENCY**	**GENERATION**	**VOLTAGE**	**CCT**	**FINISH**	**CONTROLS**
WPCL Large Wall Pack, Cutoff	**40=** 40W, 175W MH equivalent **55=** 55W, 250W MH equivalent	**A=** Generation A	**U=** 120-277V, std. **H=** 347-480V	**50=** 5000K	**B=** Bronze, std **W=** White	**(OMIT)=** None **MS4=** Motion/Daylight Sensor (Hi/Low) **PC12=** 120V Photocontrol **PC27=** 277V Photocontrol **IBB=** Integral Battery Backup

NOTES:

1. [1] Consult factory for lead time
2. In the event of a power failure, the battery backup units switch to emergency mode (700 lumen output) and operates the fixture for a minimum of 90 minutes.

SPECIFICATIONS:

		WPCL40AU50B	WPCL55AU50B
ITEM	**SPECIFICATION**	**DETAILS**	**DETAILS**
GENERAL PERFORMANCE	Input Power (W)	39	53
	Lumens Delivered (lm)	4475	6120
	Efficacy (lm/W)	116	116
	CRI	≥80	
	Lumen Maintenance (L70, TM-21 @ 25°C)	≥145,000	
	Color Temperature	5000K	
	Spacing Criteria	Available Upon Request	
	Color Consistency	Proprietary binning for uniform color	
ELECTRICAL	Power Factor (120V/277V)	0.99/0.94	0.96/0.96
	Input Voltage	120-277V standard; 347-480V available	
PHYSICAL	Housing	Aluminum	
	Lens	High quality shatterproof glass	
	Mounting	Fits electrical box or mount directly	
CERTIFICATION	Material Usage	RoHS compliant; no mercury	
	Environment	Outdoor, Wet location	
	Certification	LM-79, LM-80, TM-21, cULus, DLC Premium	
	Warranty	5 years	

Lighting layouts and spacing criteria available upon request

ORDERING*:

ORDER CODE	MODEL	CONTROLS	FINISH	VOLTAGE	WATTAGE	CCT
95308	WPLC40AH50B	None	Bronze	347-480V	40	5000K
95298	WPCL40AU50B	None	Bronze	120-277V	40	5000K
95297	WPCL40AU50BIBB	Internal Battery Backup	Bronze	120-277V	40	5000K
95296	WPCL40AU50BMS4	Motion/Daylight Sensor	Bronze	120-277V	40	5000K
95294	WPCL40AU50BPC12	120V Button Photocontrol	Bronze	120-277V	40	5000K
95295	WPCL40AU50BPC27	277V Button Photocontrol	Bronze	120-277V	40	5000K
95303	WPCL40AU50W	None	White	120-277V	40	5000K
95327	WPCL55AH50B	None	Bronze	347-480V	55	5000K
95332	WPCL55AH50W	Motion/Daylight Sensor	White	347-480V	55	5000K
95317	WPCL55AU50B	None	Bronze	120-277V	55	5000K
95316	WPCL55AU50BIBB	Internal Battery Backup	Bronze	120-277V	55	5000K
95315	WPCL55AU50BMS4	Motion/Daylight Sensor	Bronze	120-277V	55	5000K
95313	WPCL55AU50BPC12	120V Button Photocontrol	Bronze	120-277V	55	5000K
95314	WPCL55AU50BPC27	277V Button Photocontrol	Bronze	120-277V	55	5000K
95322	WPCL55AU50W	None	White	120-277V	55	5000K

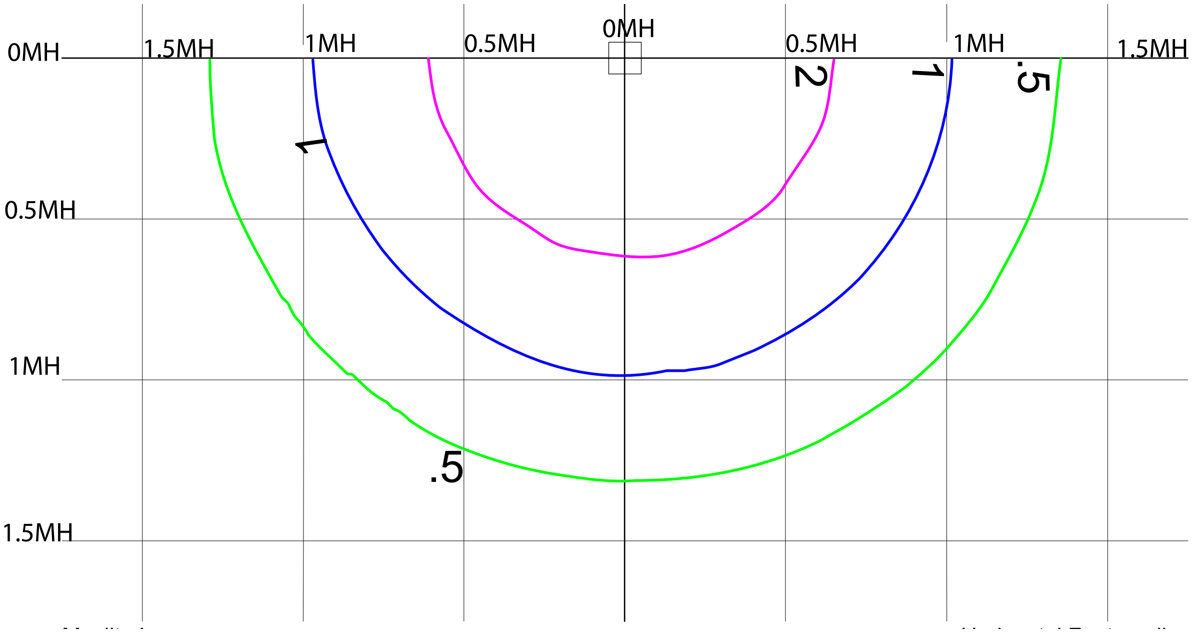

Original Mounting Height 20

New Height	16'	22'	30'	33'	45'
Multiplier	1.56	0.83	0.44	0.37	0.20

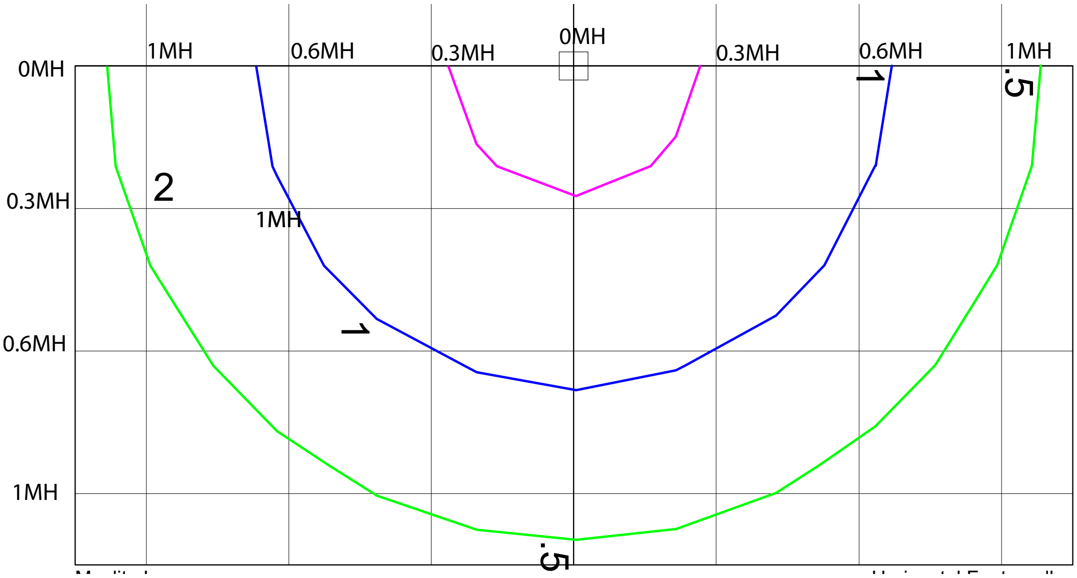

Original Mounting Height 30

New Height	24'	34'	40'	51'	65'
Multiplier	1.56	0.78	0.56	0.35	0.21