SMITH & GOAT

smithandgoat@hotmail.com
www.smithandgoat.co.uk
@smithandgoat

The Pill

- The Sink is designed to sit countertop but may be wall hung using one of our metal brackets. The bracket will be slightly visible from the front and side view.
- Weight – 20kg
- Sinks are made to a tolerance of +/- 5mm
- Does not contain an overflow
- Plug is centred from the outer edges
- Requires a universal unslotted plug waste (not provided)

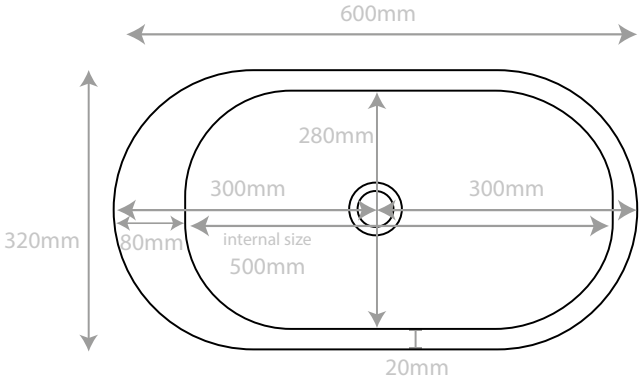

TOP ELEVATION

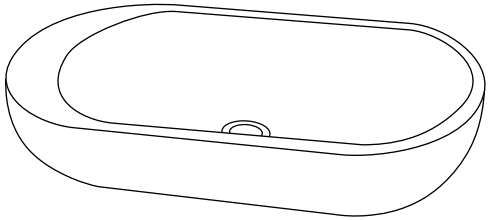

ISOMETRIC VIEW

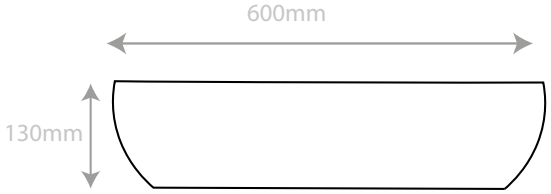

FRONT ELEVATION

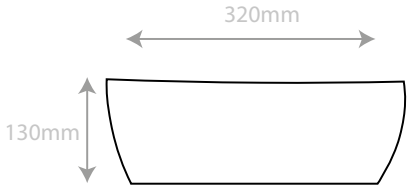

SIDE ELEVATION

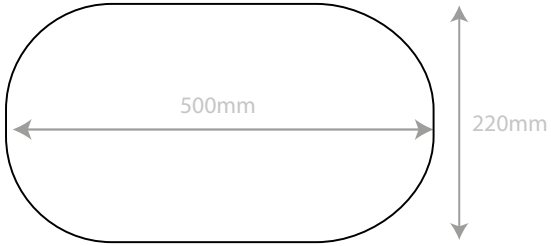

EXTERNAL BASE