KGD-54

33 Inch Dual Mount Single Bowl Granite Kitchen Sink

Kräus

SPECIFICATION SHEET

Sink Dimensions
Overall Dimensions: 33" x 22"
Bowl Dimensions: 29" x 16 3/8"
Bowl Depth: 9"

Features
- Granite Composite Construction
- Dual Mount Single Bowl Sink
- Required Minimum Cabinet Size: 36" Left to Right, 24" Front to Back
- Center Off-Set Drain
- 3 1/2" Drain Opening

Accessories Included
- Strainer ST-2
- Mounting Hardware
- Cut-out Template
- Silicone Mitt KSM-1BLACK
- Silicone Trivet KST-1BLACK

Available Colors
- Black
- Grey

CODES/STANDARDS:
Product Certification
ASME A112.19.3/CSA B45.4, cUPC certified

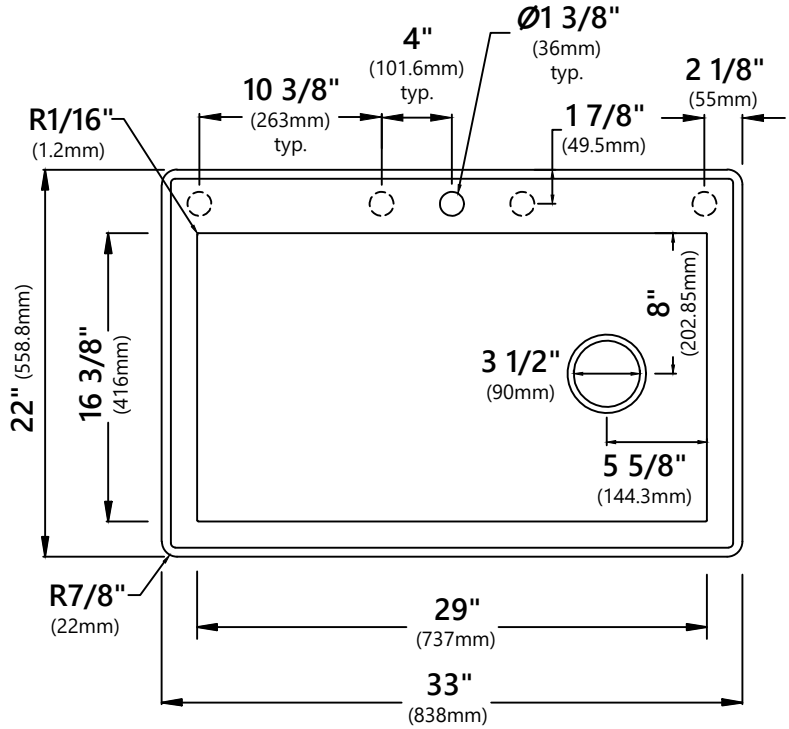

Note: Although Kraus granite and quartz composite sinks are highly heat resistant, placing hot items right from the stove or oven directly into the sink may cause surface discoloration. Consider using a trivet or rolling mat for extremely hot items to avoid potential heat damage.

Warranty
Kraus Limited Lifetime Warranty
see website for details **www.kraususa.com**

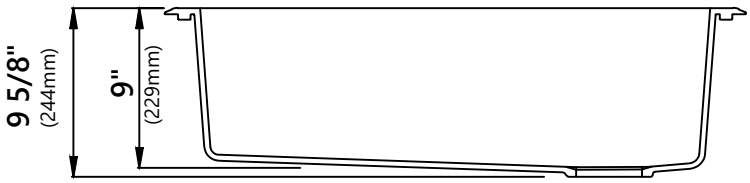

Kraus USA Customer Service
1.800.775.0703 | customerservice@kraususa.com

REV. December 1, 2020