KS1491,2,3,5,6,8AL
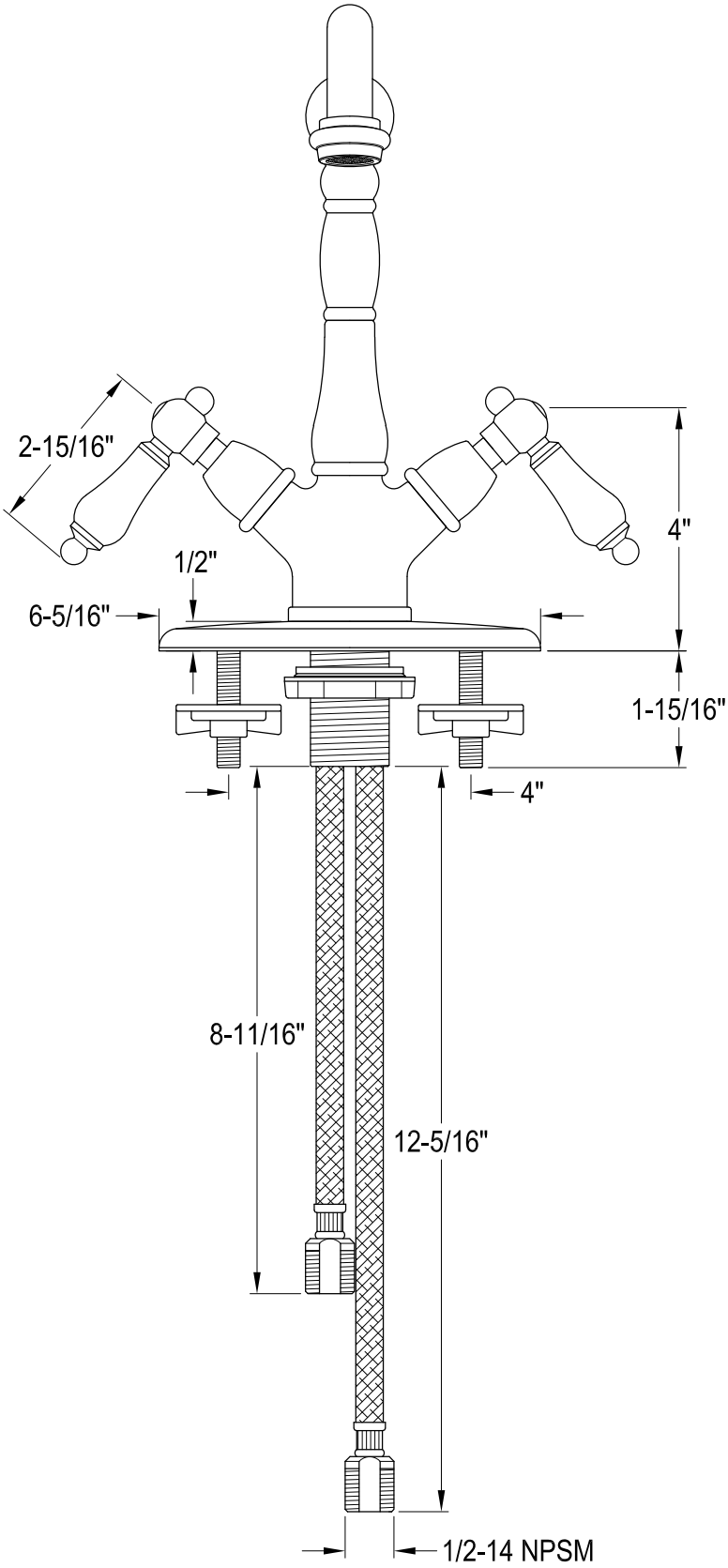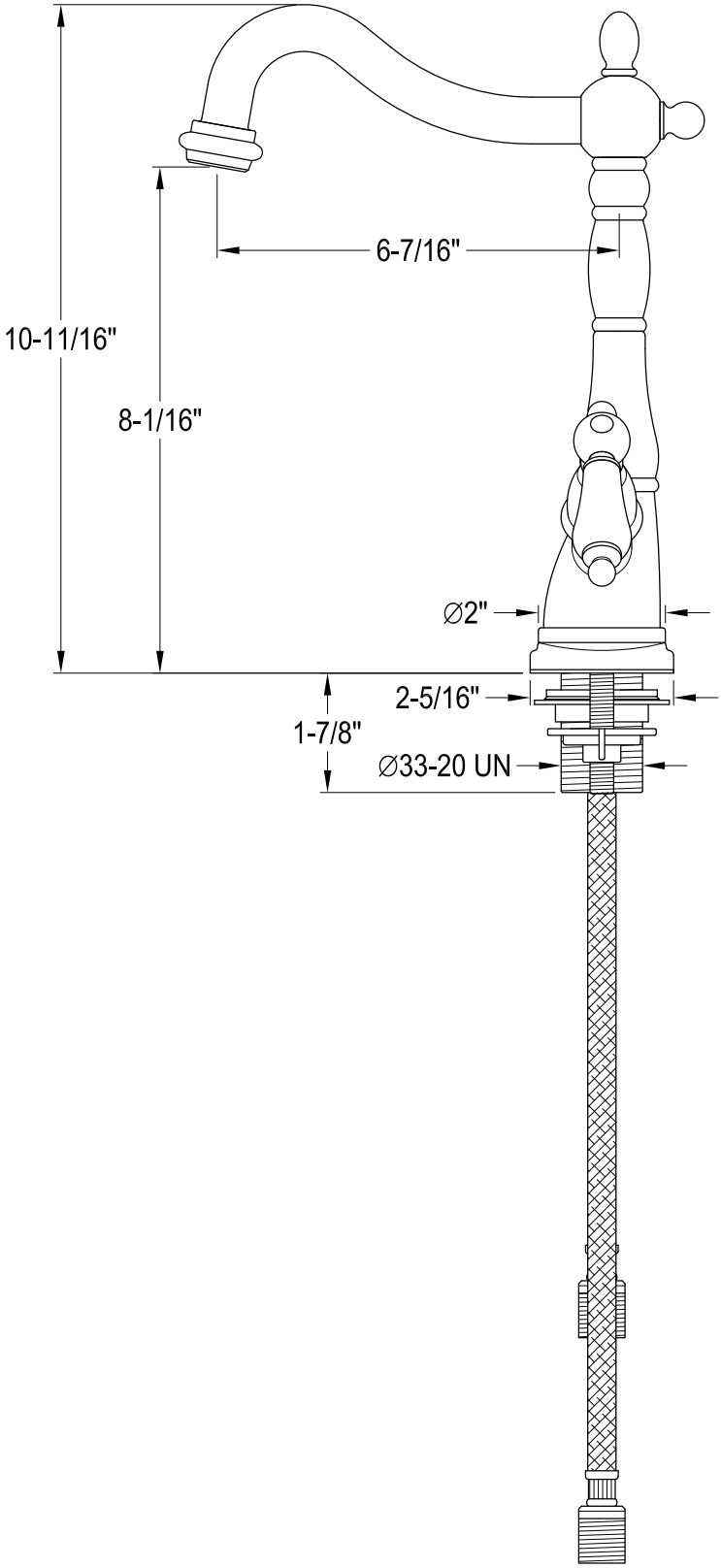
Twin Handles Vessel Sink Faucet