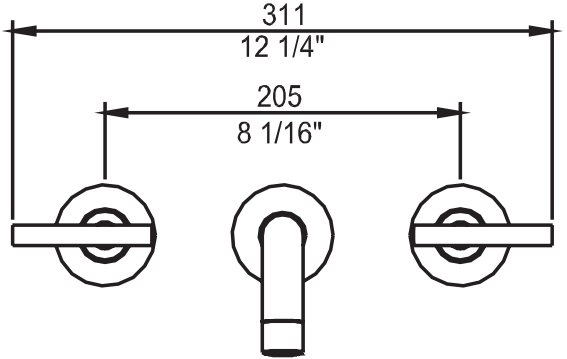
311
12 1/4"
205
8 1/16"

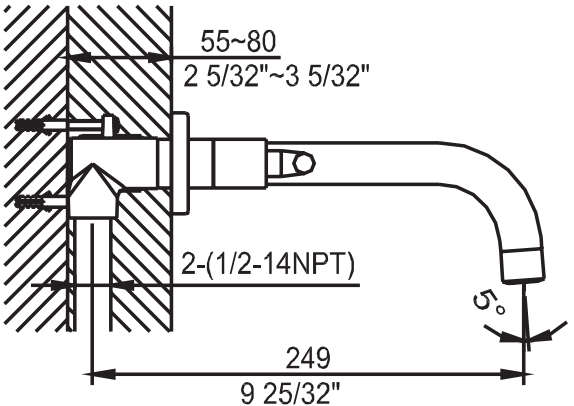
55~80
2 5/32"~3 5/32"
2-(1/2-14NPT)
5°
249
9 25/32"