SPACE SAVER DRAWER BRACKET KIT

SPS14BLK-DRWKIT

WHAT IS INCLUDED

A 4 pcs

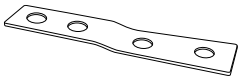

B 8 pcs

C 8 pcs

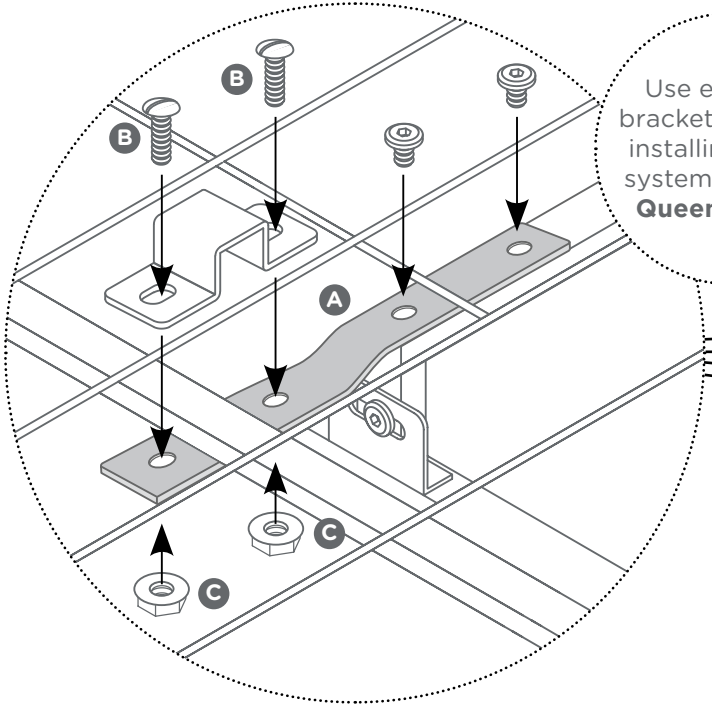

Use extension brackets (2) when installing drawer system with **TXL, Queen** or **King.**

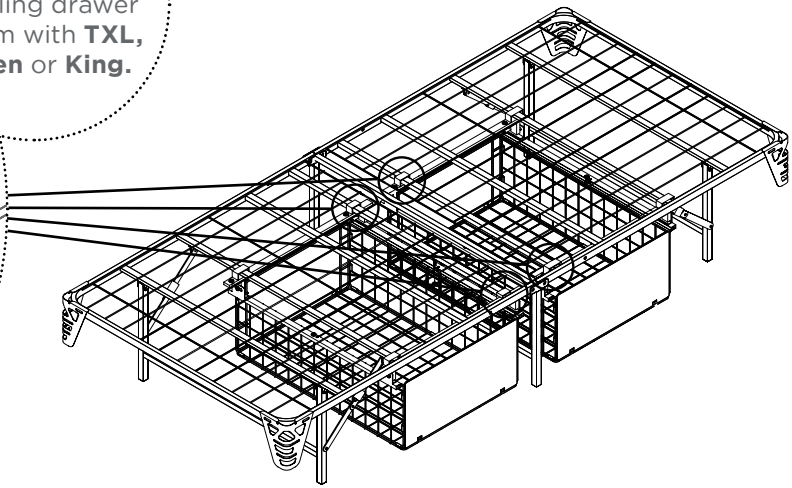

SPACE SAVER DRAWER BRACKET KIT
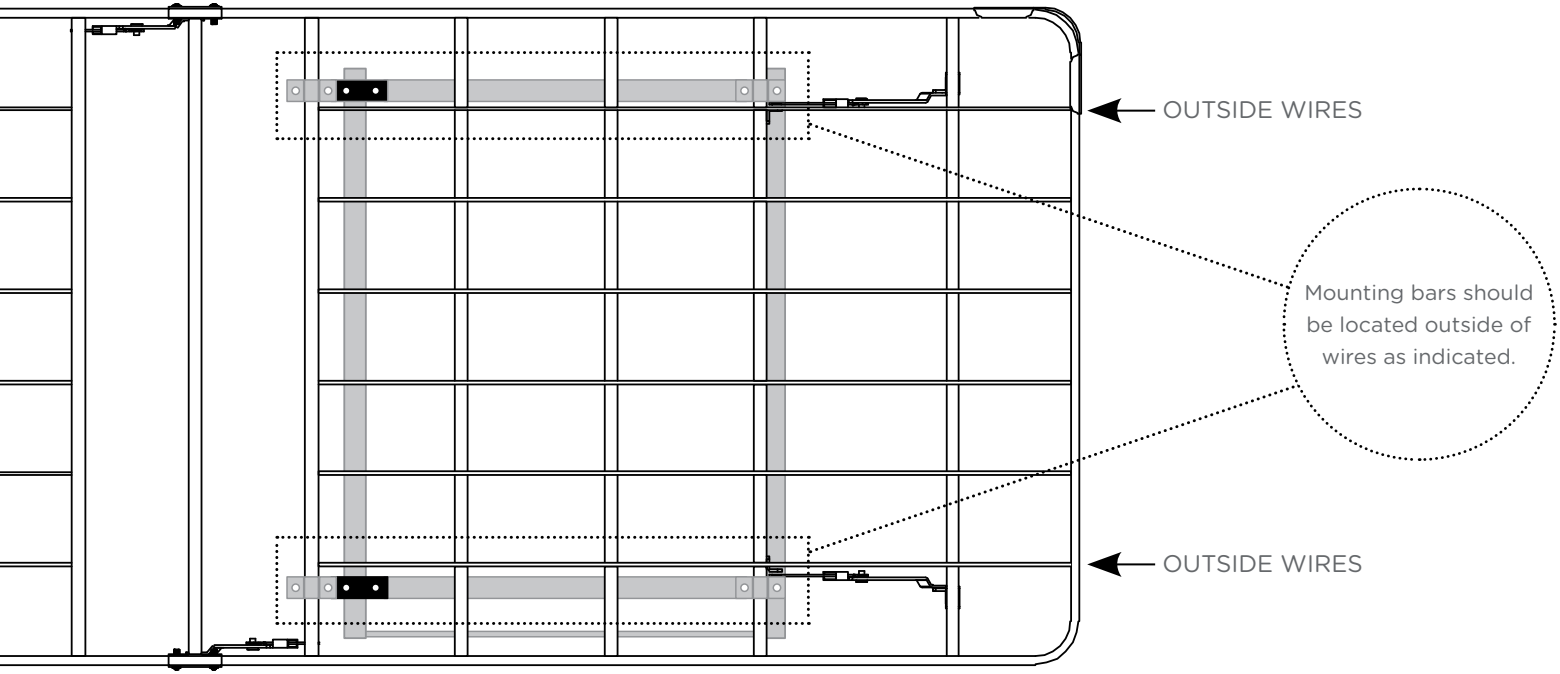
SPS14BLK-DRWKIT