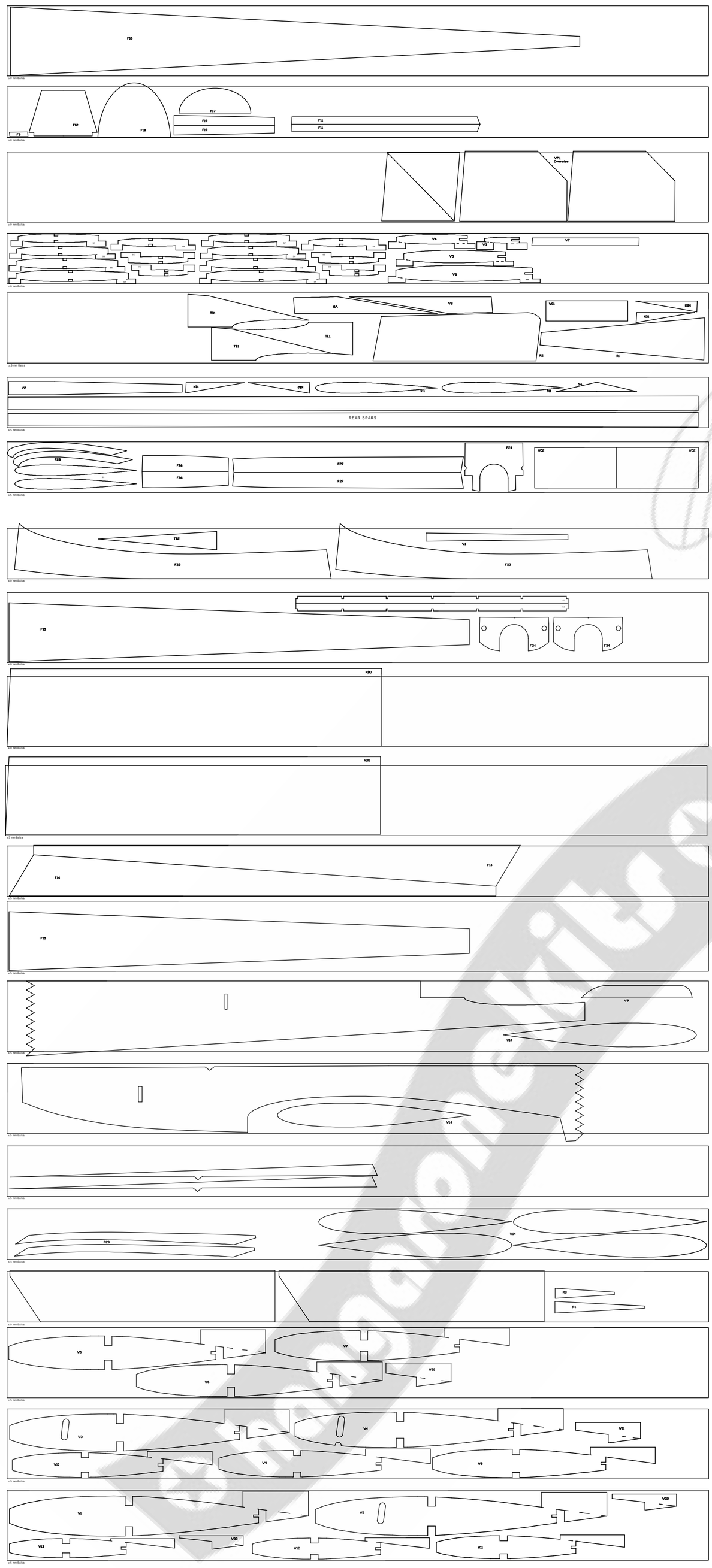

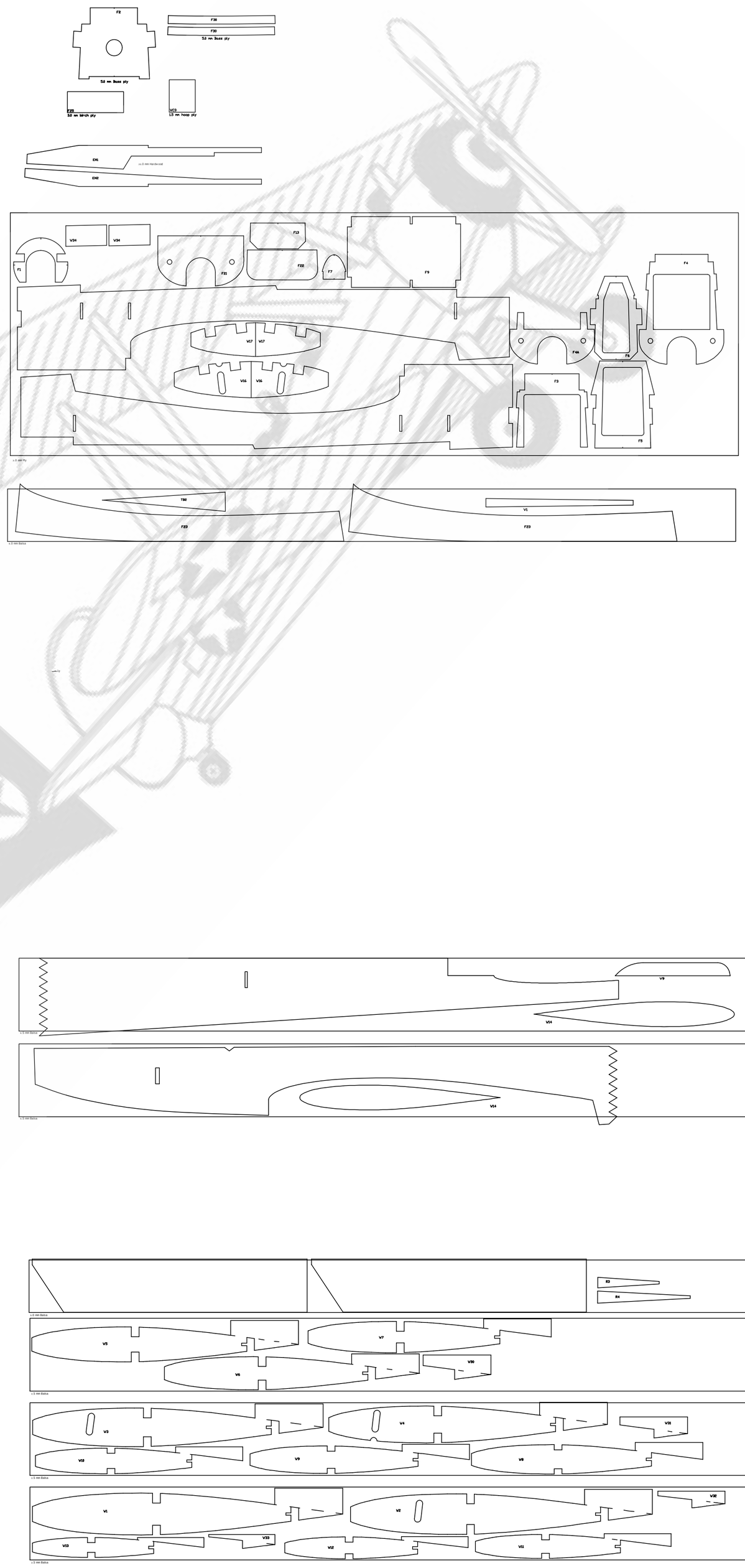

Hangaronekits

Joker 60

Parts Sheet