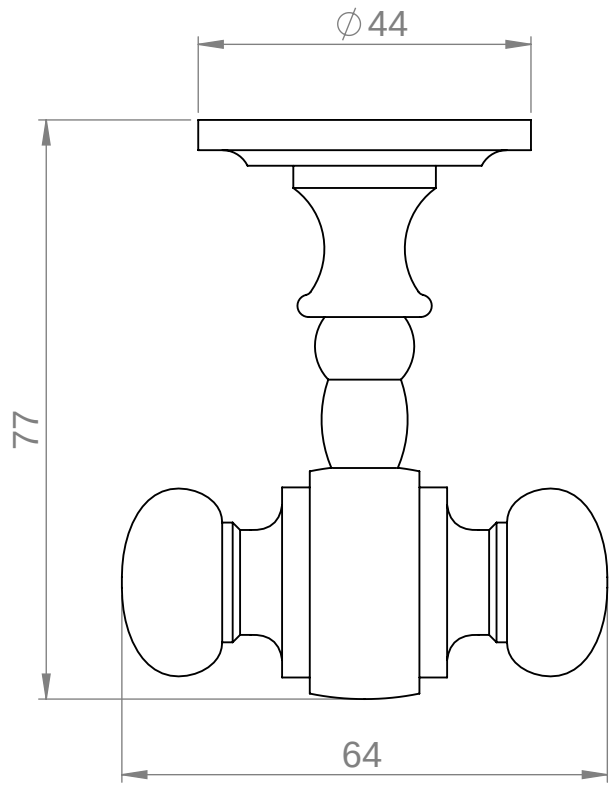

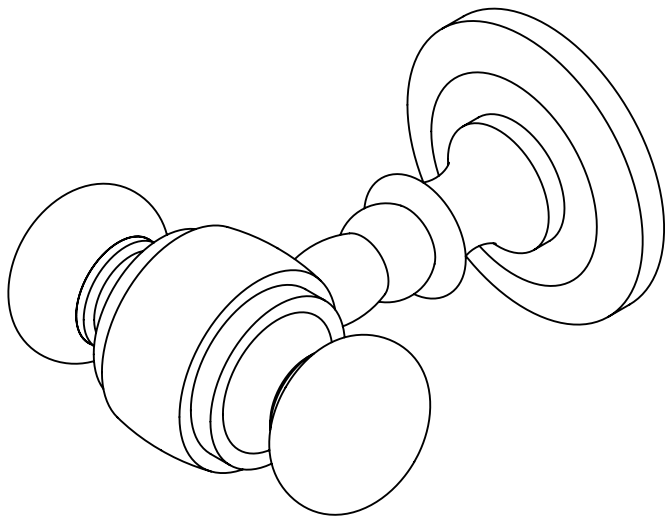

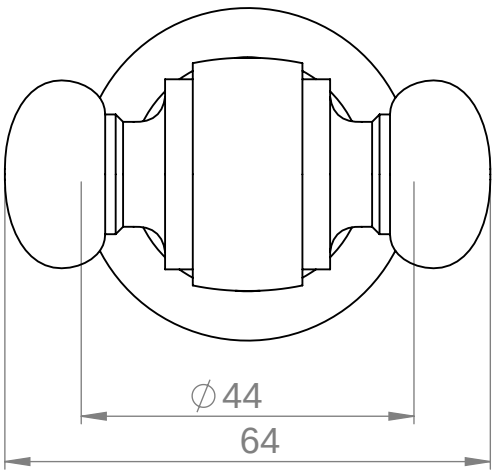

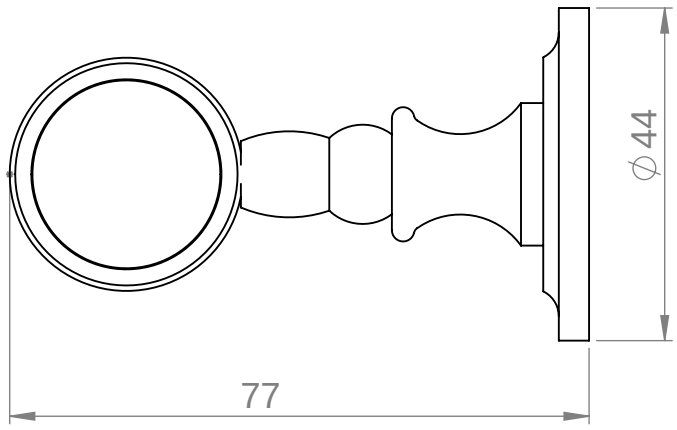

BALINEUM

orders@balineum.co.uk

www.balineum.co.uk

The copyright for this drawing belongs to Balineum.

It must not be reproduced or distributed without prior written consent.

All dimensions are in mm unless otherwise stated
Do not scale from this drawing

Hanbury Double Robe Hook

14.01.2020	SCALE 1:1	PAGE 1 OF 1