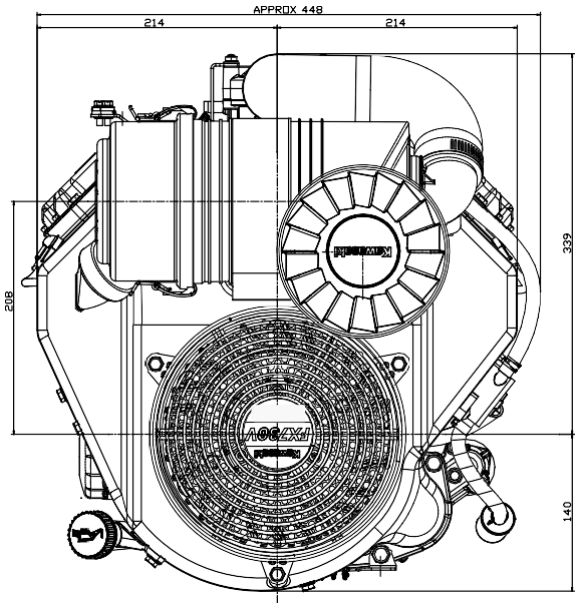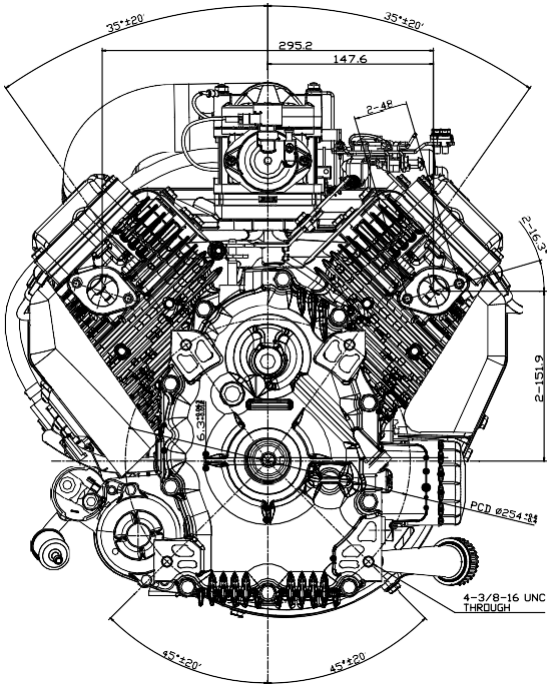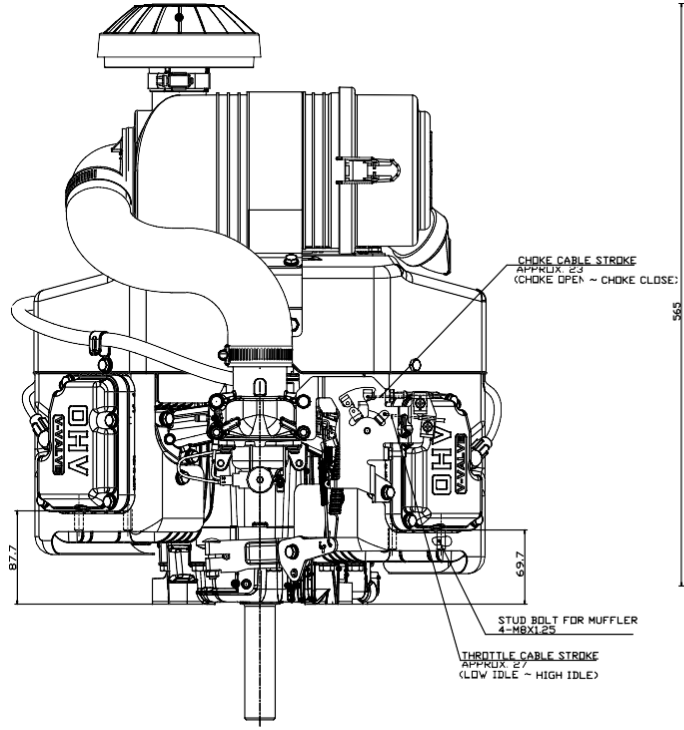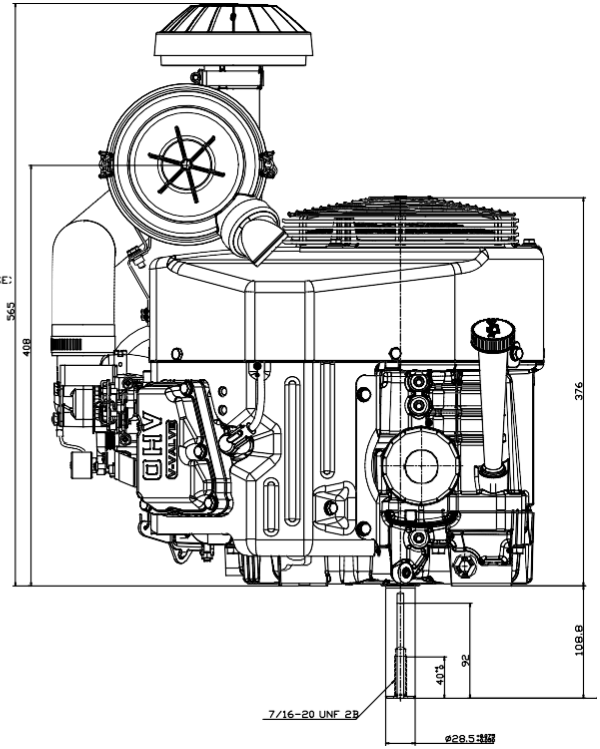FX651V, FX691V, FX730V