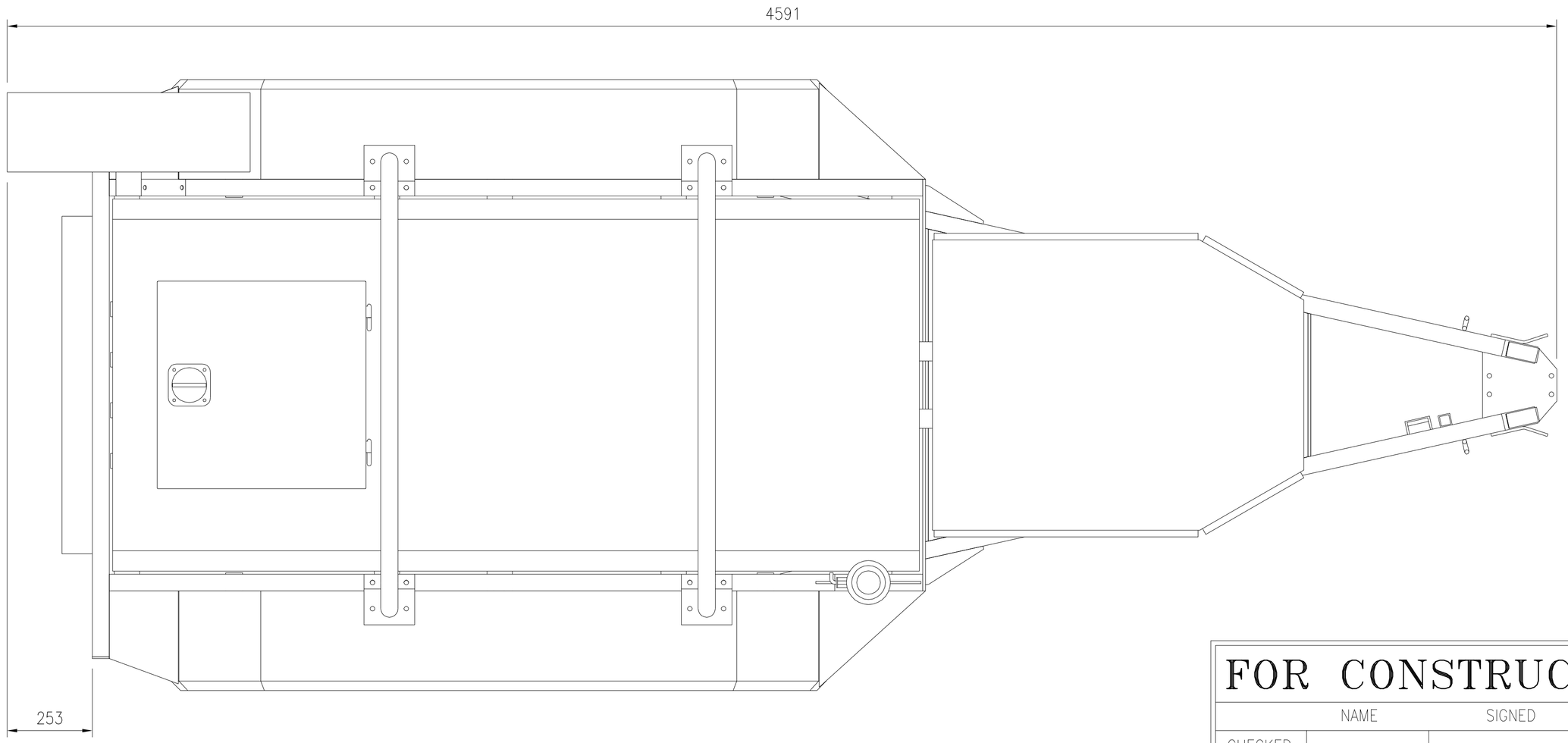

PLAN

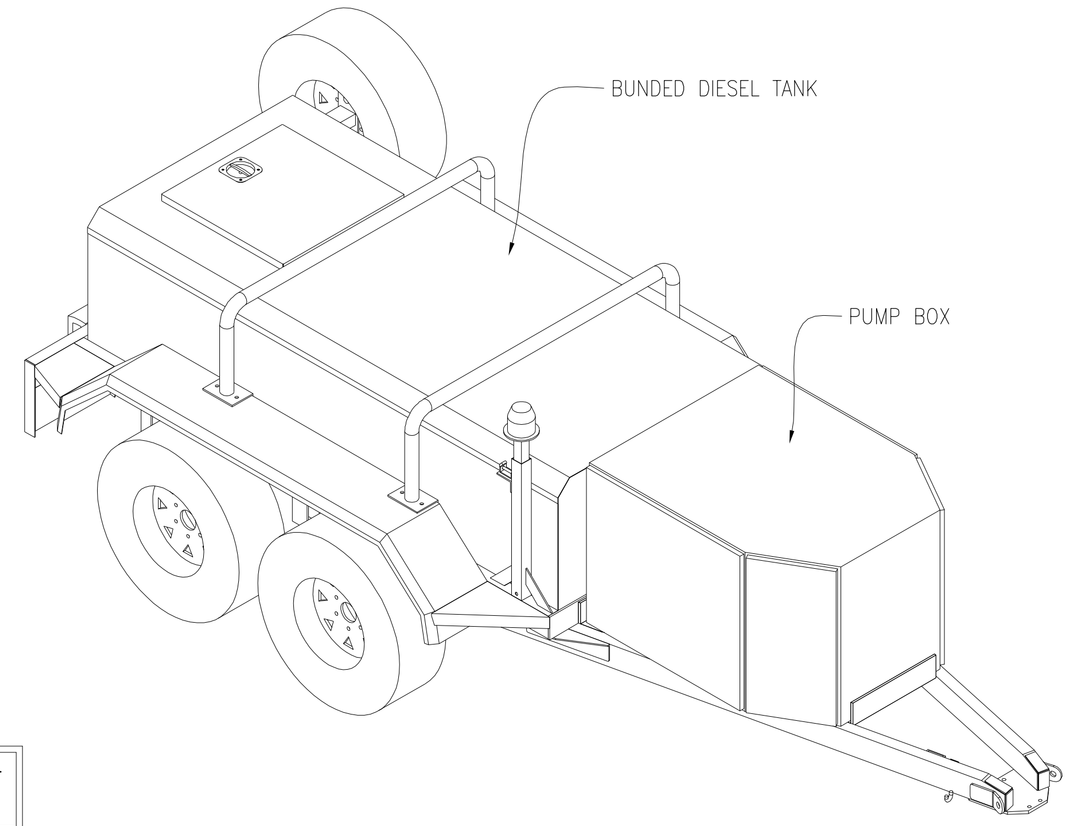

ISOMETRIC

FOR CONSTRUCTION			
	NAME	SIGNED	DATE
CHECKED			
AUTHORISED			

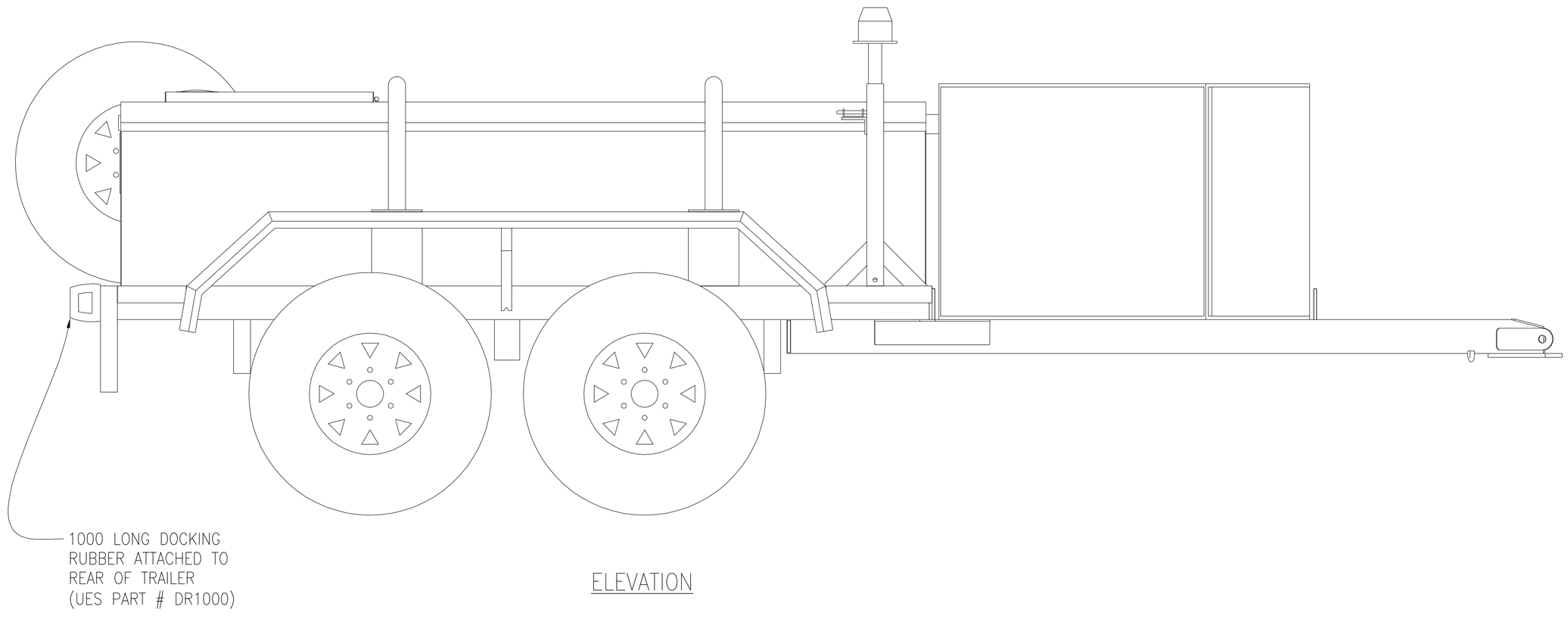

ELEVATION

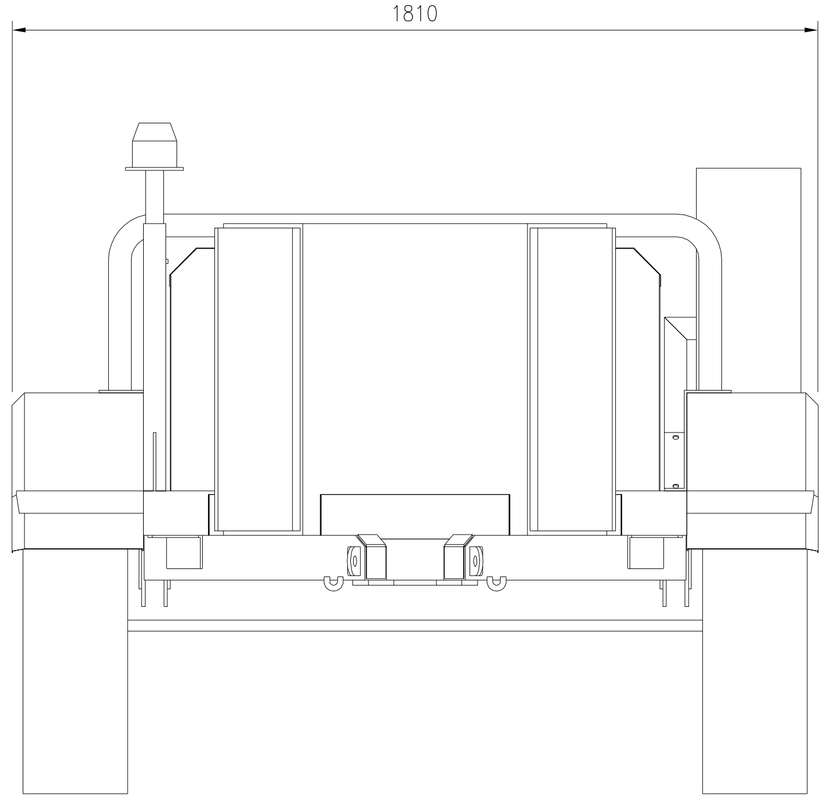

FRONT ELEVATION

DRAWING No	REFERENCE DRAWING DETAILS	REV	DRAWN BY	APPROVED BY	DATE	REVISION DESCRIPTION
		1	LBW		15.09.14	PUMP SUPPORTS ADDED, MANWAY REMOVED & PIPES EXTENDED
		0	LBW	B.PETERSEN	12.07.14	ISSUED FOR CONSTRUCTION

PETRO INDUSTRIAL
www.petroind.com

DESIGNED BY	SHELLDENS
DRAWN BY	LBW
CHECKED BY	D.VUKOVAC
APPROVED BY	B.PETERSEN
DATE APPROVED	
SCALE	1:10 UNO

STANDARD DIESEL TRAILER ATM 2000kg
GENERAL ARRANGEMENT

EQUIPMENT No.
SHEET 1
DRAWING No. 1035-SHE-GA-0001
REV 1
A1