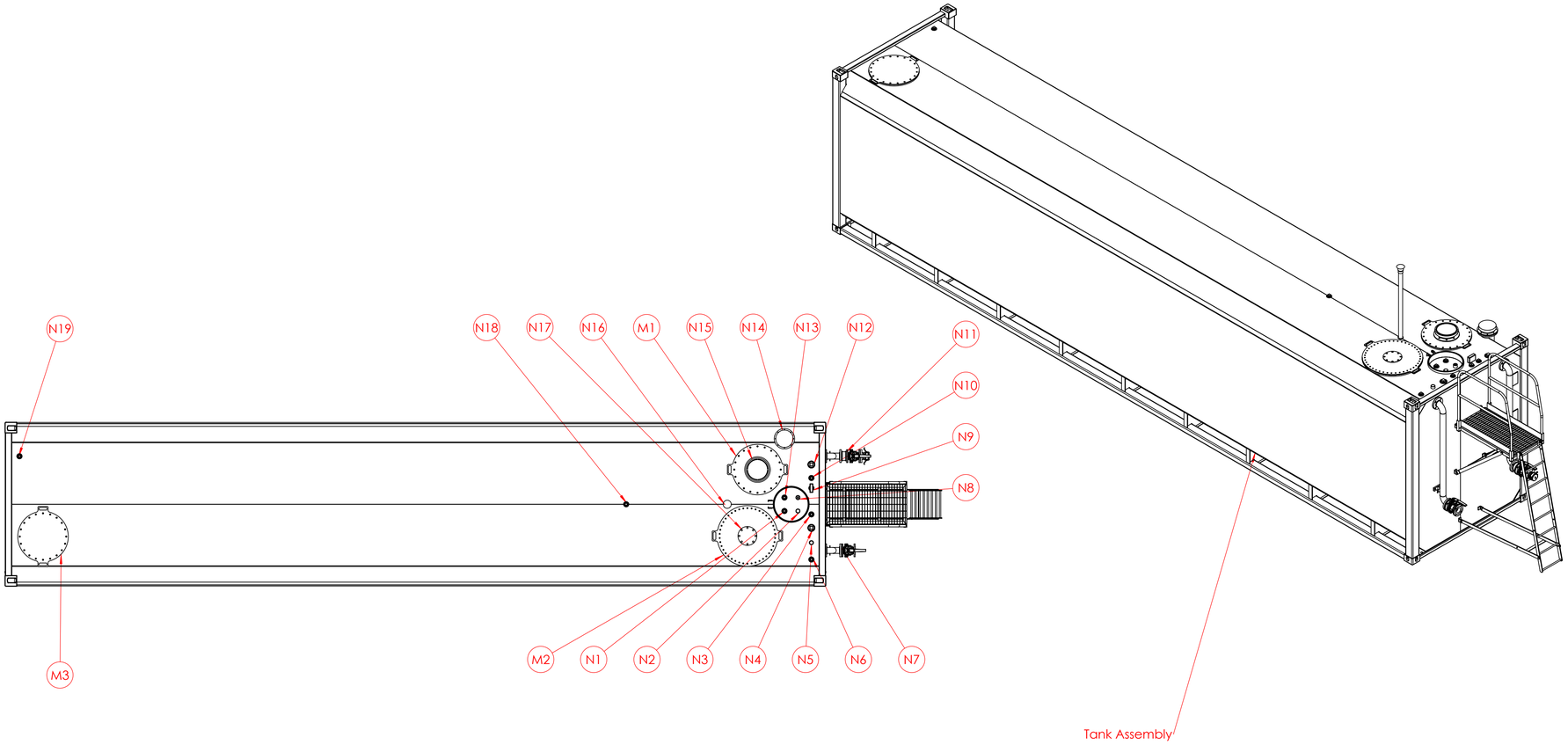

Nozzle Schedule		
Nozzle ID	Connection Type	Service
N1	DN50 - ISO4144 - BSP Socket	Spare (Plugged)
N2	DN50 - ISO4144 - Male	Intersitial Dipstick (Capped)
N3	DN50 - ISO4144 - BSP Socket	Interstitial Vent
N4	DN80 - ISO4144 - BSP Socket	Spare (Plugged)
N5	DN50 - ISO4144 - Male	Secondary Suction (Capped)
N6	DN50 - ISO4144 - BSP Socket	Spare (Plugged)
N7	DN80 - ANSI 150 - Flange	Primary Suction Spool
N8	DN50 - ISO4144 - Male	Dip (Capped)
N9	DN50 - ISO4144 - BSP Socket	High Level Alarm
N10	DN50 - ISO4144 - BSP Socket	Spare (Plugged)
N11	DN80 - ANSI 150 - Flange	Primary Fill Spool (c/w Ball Valve, Check Wafer, Type F Camlock and Dustcap)
N12	DN80 - ISO4144 - BSP Socket	Spare (Plugged)
N13	DN50 - ISO4144 - BSP Socket	Spare (Plugged)
N14	DN200 - Flanged	Interstitial Vent
N15	DN200 - Flanged	Pressure Vent
N16	DN50 - ISO4144 - BSP Socket	Free To Air Vent
N17	DN200 - Flanged	Inspection Hatch
N18	DN50 - ISO4144 - BSP Socket	Spare (Plugged)
N19	DN50 - ISO4144 - BSP Socket	Spare (Plugged)
M1	Flanged (OD=750, ID=600)	Primary Manway
M2	Flanged (OD=900, ID=750)	Secondary Manway
M3	Flanged (OD=750, ID=600)	Tertiary Manway

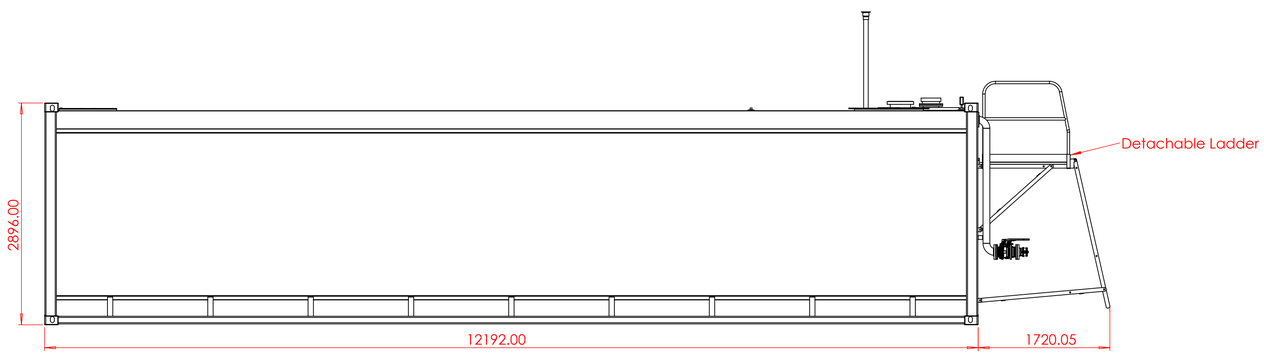

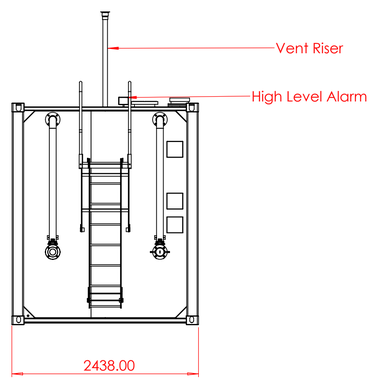

Tank Data	
DESIGN CODE	AS 1692, AS 1940
BUILT TO	AS 4100, AS 1554
PLATE THICKNESS	6MM/6MM Q235B
EXTERNAL DIMENSIONS	12192mm x 2438mm x 2896mm
GROSS VOLUME	75370 L
SAFE VOLUME	73500 L
NDT	MPT/DPT
TARE WEIGHT	13481 KG

PETRO INDUSTRIAL
Factory 2, 106 Potassium street
PO Box 407
Narangba QLD 4504
p: 07 3204 9558
e: sales@petroindustrial.com.au

COPYRIGHT NOTICE

This drawing remains property of Petro Industrial Pty Ltd and is not intended for distribution

REV.	DATE	REVISION DESCRIPTION	CHKD	APPR	REV.	DATE	REVISION DESCRIPTION	CHKD	APPR	REFERENCE DRAWING No.	REFERENCE DRAWINGS

All dimensions are in mm unless specified otherwise
Drawn to AS1100.101-1992

MATERIAL: As Per Manufacturing Drawings

FINISH: RAL9003: Signal White

PAGE: 1 OF 1

TITLE: GA Cover

DRAWN BY:

CHECK DRW:

CLIENT:

PROJECT NO:

THIRD ANGLE PROJECTION

DRAWING SIZE: A1

SCALE 1:40

DRAWING NUMBER: LT75-GA

REV.