Conley's Mfg & Sales

Rolling Benches for 21' Wide Greenhouse

4' Wide Bench

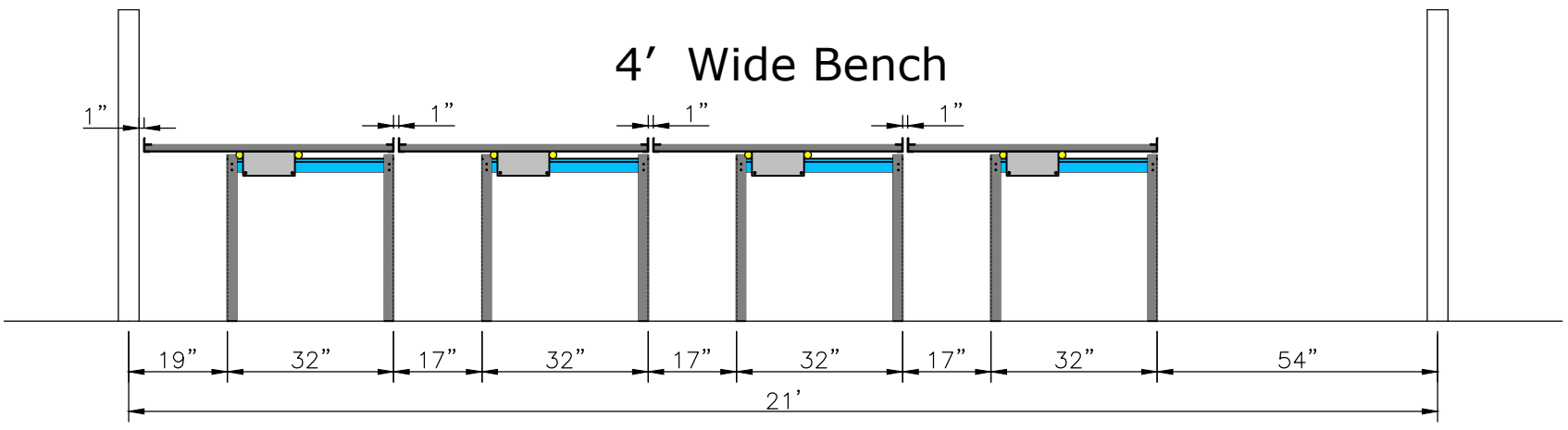

4'-6" Wide Bench

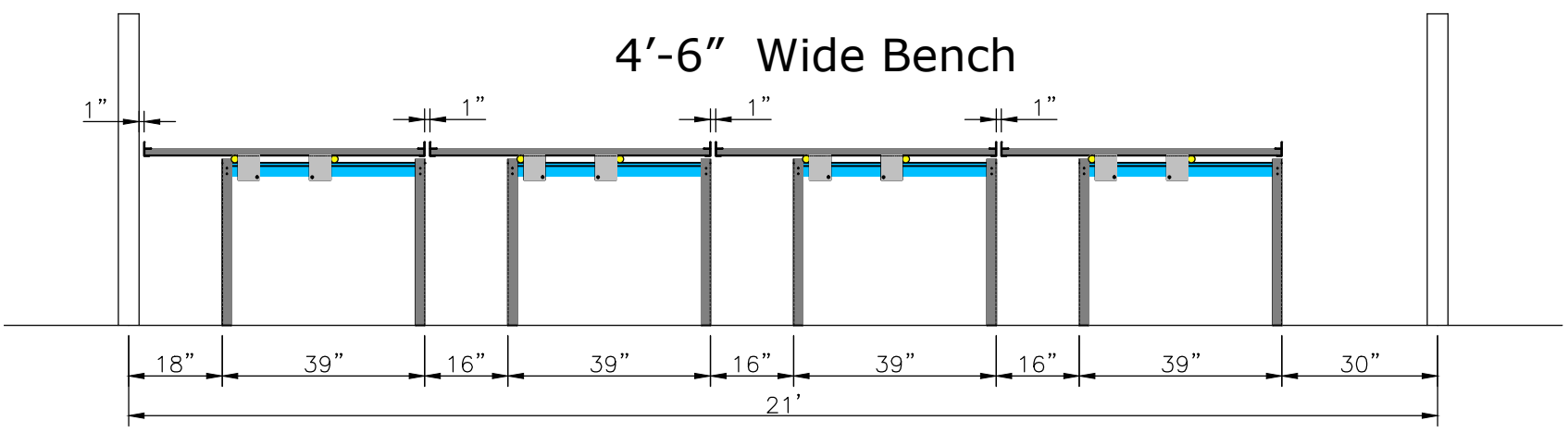

5' Wide Bench

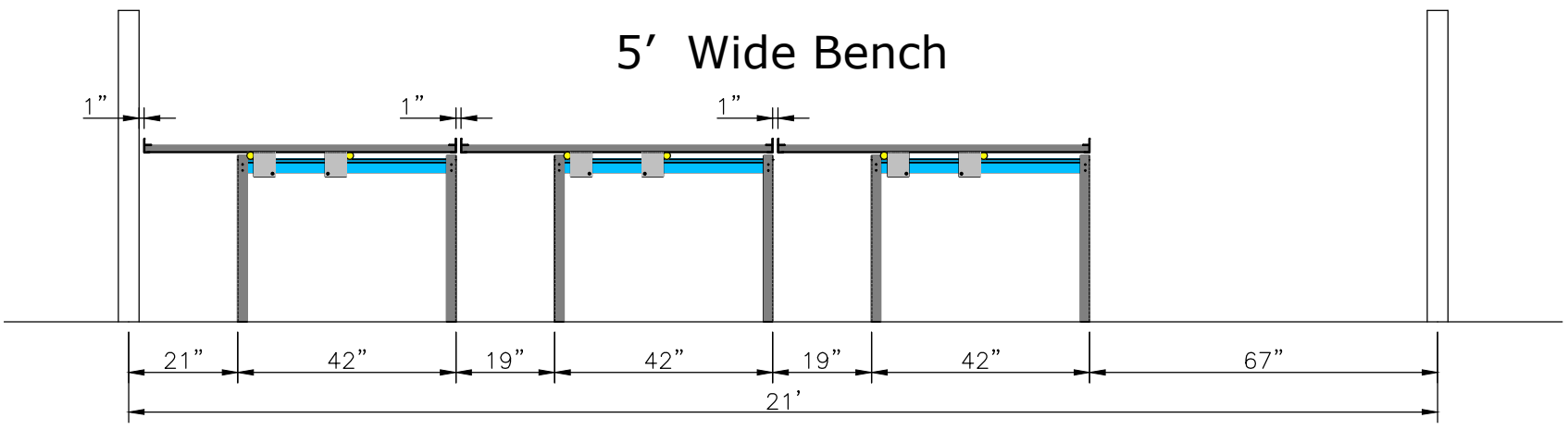

5'-6" Wide Bench

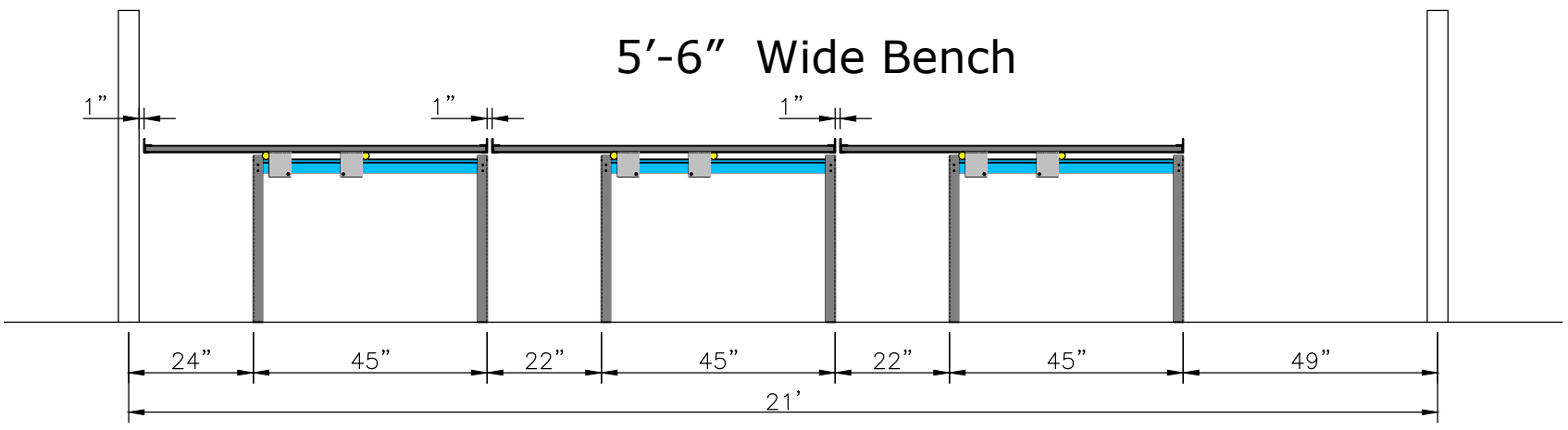

6' Wide Bench

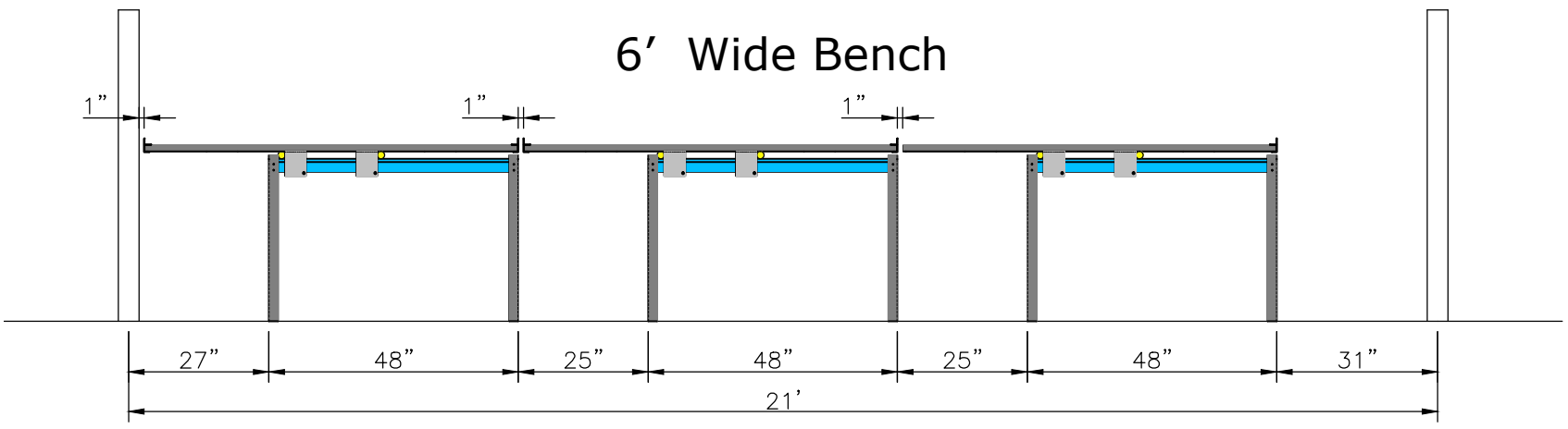
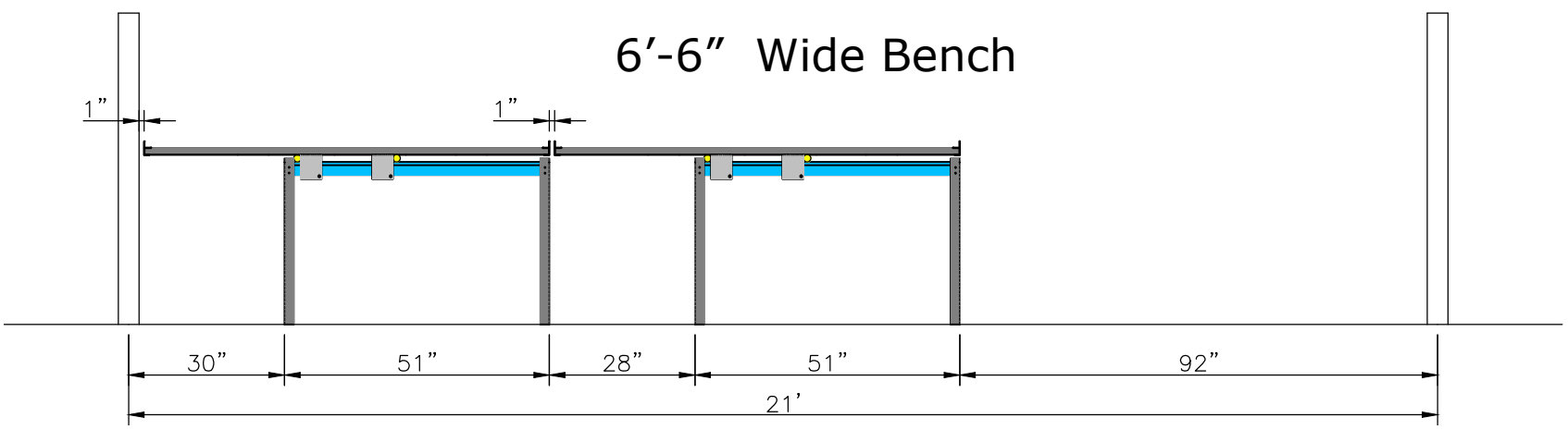
6'-6" Wide Bench