GUY STRAIN INSULATORS

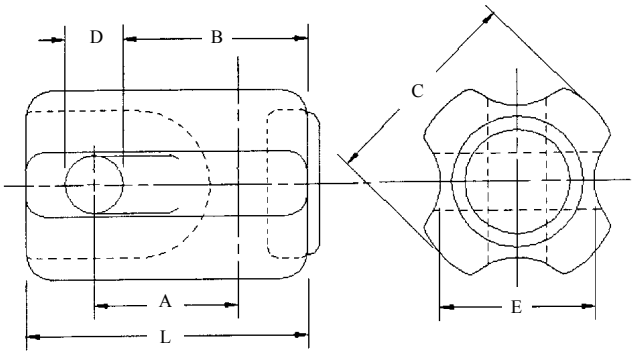

DIMENSIONS

CATALOG NUMBER	ANSI CLASS	DIM. L	DIM. A	DIM. B	DIM. C	DIM. D	DIM. E	MAXIMUM CABLE SIZE	ULTIMATE STRENGTH	WT. PER 100
U54 – 1	54 – 1	3 1/2''	1 3/4''	2 1/2''	2 1/2''	5/8''	1 3/4''	3/8''	10000 LBS.	100 LBS.
U54 – 2	54 – 2	4 1/4''	2 1/4''	3''	2 7/8''	7/8''	2 1/8''	1/2''	12000 LBS.	155 LBS.
U54 – 3	54 – 3	5 1/2''	3 1/8''	4 1/16''	3 3/8''	1''	2 3/8''	5/8''	20000 LBS.	270 LBS.
U54 – 4	54 – 4	6 3/4''	2 5/8''	4 1/2''	3 1/2''	1''	2 3/8''	5/8''	20000 LBS.	428 LBS.

ELECTRICAL VALUES

CATALOG NUMBER	FLASHOVER DRY	FLASHOVER WET	LEAKAGE DISTANCE
U54 – 1	25 kV	12 kV	1.625''
U54 – 2	30 kV	15 kV	1.825''
U54 – 3	35 kV	18 kV	2.25''
U54 – 5	40 kV	23 kV	3.0''

THE ABOVE STRAIN INSULATORS ARE OFFERED IN A "SKY GRAY' GLAZE.
FOR BROWN GLAZE,CHANGE THE SUFFIX "G" TO A "B".
EACH OF THE ABOVE CONFORM TO ASNI STANDARD C29.4 .