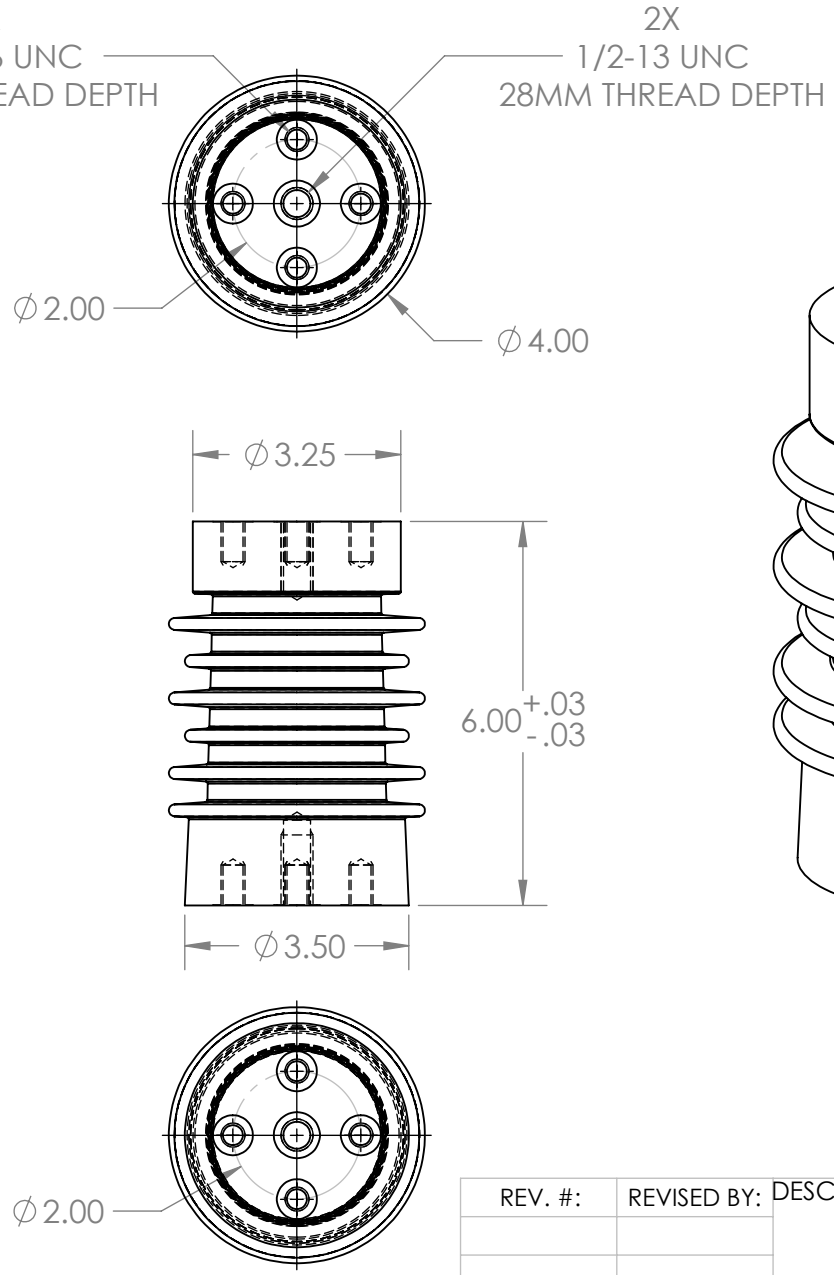

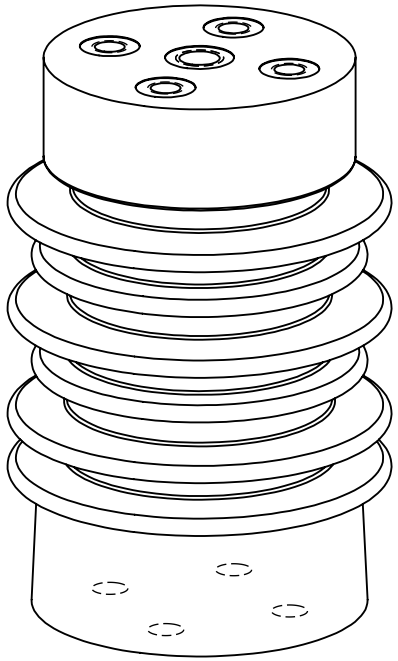

TECHNICAL REQUIREMENTS:	
CATILEVER STRENGTH	1250# [5.69KN]
TENSILE STRENGTH	3000# [13.7KN]
TORSION STRENGTH	3500# [0.41KN.M]
COMPRESSION STRENGTH	20000# [91KN]
NEMA VOLTAGE RATING	13.2KV
60HERTZ WITHSTAND-DRY	36KV
60 HERTZ WITHSTAND-DEW	26KV
IMPULSE WITHSTAND	95KV
APPLICABLE STANDARD	ANSI C29.10-1989

REV. #:	REVISED BY:

DESCRIPTION:

INDOOR BUS SUPPORT

Meister International, LLC
Serving the needs of the Global Electric Power Industry
513-923-2712
www.meisterintl.com 1308 US ROUTE 50, SUITE 200, MILFORD, OH 45150

PROPRIETARY AND CONFIDENTIAL

THE INFORMATION CONTAINED IN THIS DRAWING IS THE SOLE PROPERTY OF MEISTER INTL. ANY REPRODUCTION IN PART OR AS A WHOLEWITHOUT THE WRITTEN PERMISSION OF MEISTER INTL. IS PROHIBITED.

MATERIAL: CYCLOALIPHATIC EPOXY

FINISH:

DO NOT SCALE DRAWING

SIZE	PART NO.	REV
A	A20-3-OC	

SCALE: NTS | WEIGHT: | SHEET 1 OF 1