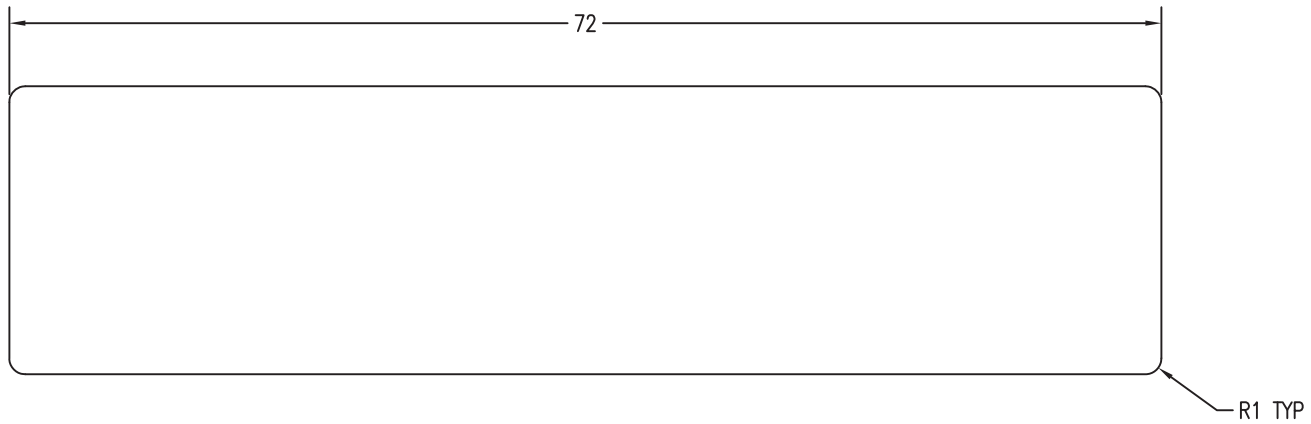


TOP VIEW BENCH

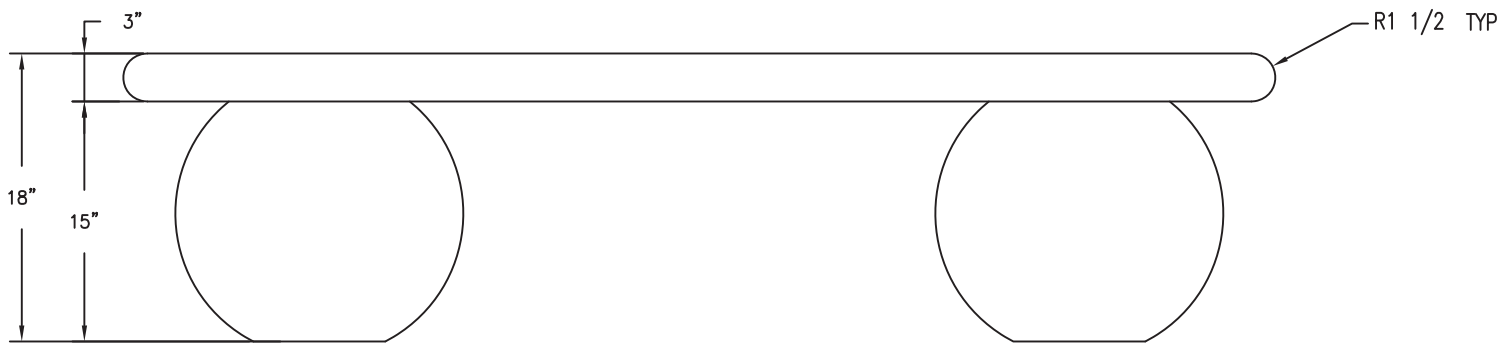


ELEVATION VIEW BENCH

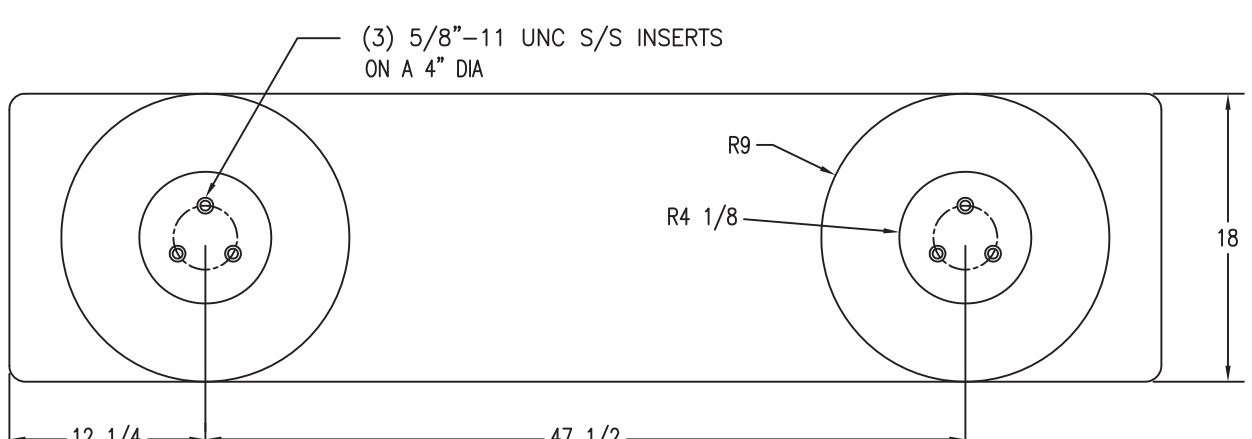


BOTTOM VIEW BENCH

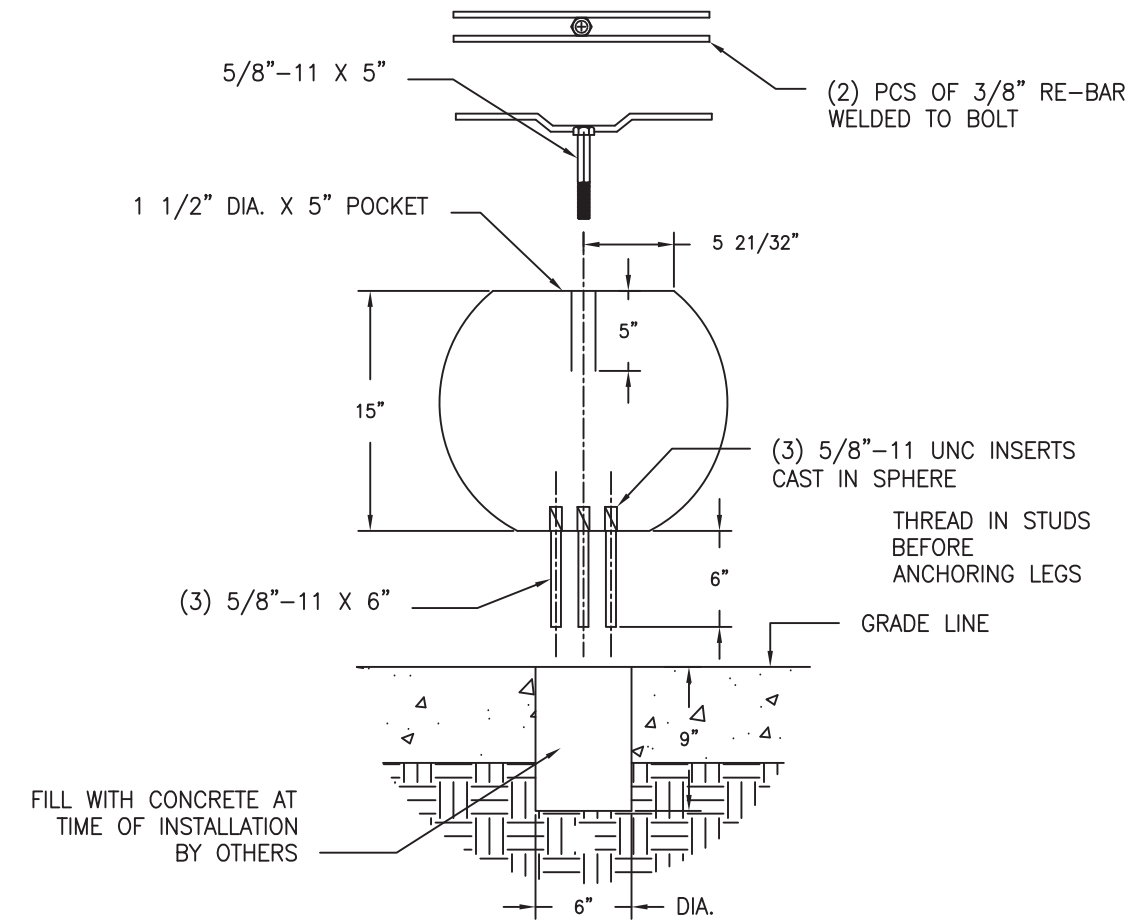


BOLLARD ANCHOR

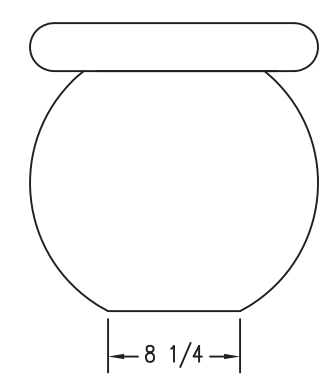


SIDE VIEW BENCH

THE PARK RESERVE

MANUFACTURED BY:

CROWD CONTROL WAREHOUSE

| REVISIONS | | | | | | DRAWN BY | JOB | | MATERIAL |
|---|---|---|---|---|---|---|---|---|---|
| NO. | DATE | BY | NO. | DATE | BY | TITLE | JOB NO. | | WEIGHT |
| 1 | | | 4 | | | SCALE | UNLESS OTHERWISE SPECIFIED DIMENSIONS ARE IN INCHES ANGLES ±0.5° 2 PL ±0.01 3 PL ±0.005 | DATE 9–25–08 | FINISH OPTIONS |
| 2 | | | 5 | | | | | | DWG. NO. TF5142 |
| 3 | | | 6 | | | | | | |