FEDERAL INDUSTRIES
A Standex Company
215 Federal Avenue
Belleville, Wisconsin 53508-9201
Phone: 800-356-4206
Fax: 608-424-3234
Email: Geninfo@Federalind.com
Website: Federalind.com

Project Name:_____

Item #:_____

Model #: _____ Qty:_____

Approval:_____

AIA #

SIS #

VISION SERIES - Square Ends Self-Serve Refrigerated Slide-In Display Case - 60"

Designed with impulse sales in mind. Get maximum return from an attention-grabbing merchandiser and increase profits.

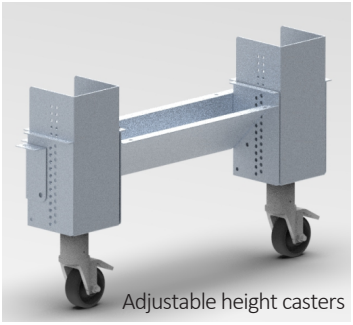

Adjustable height casters

MODEL	DIMENSIONS (Includes End Panels)
☐ VRSS3660S-SLD	36 x 33 x 71.6 (in) 914 x 838 x 1524 (mm)
☐ VRSS4860S-SLD	47.25 x 33 x 71.6 (in) 1200 x 838 x 1524 (mm)
☐ VRSS6060S-SLD	59.25 x 33x 71.6 (in) 1505 x 838 x 1524 (mm)
☐ VRSS7260S-SLD	71.25 x 33x 71.6 (in) 1810 x 838 x 1524 (mm)

STANDARD FEATURES

Model Features

- Black interior including shelves
- Stainless steel display deck
- Tempered glass upper end panels
- Black powder coated base frame
- Black trim
- Rear air intake and discharge
- Adjustable height casters ó3нђ ű2 оуђ Ŏ2dzyűŜ№ ЌŜ1Ǝ Ků) with locks
- Adjustable from 3
- Cord & plug
- Energy saving night curtain

Refrigeration

- R449a refrigerant
- Electronic temperature control maintains 38º-40ºF (3.3º-4.4ºC) Note: Case temperatures will vary if the air curtain is disrupted.
- Digital thermometer
- Clear coil on demand defrost
- Coated evaporator coil

Shelving

- Two tiers of adjustable black metal shelves with black price tag molding
- Shelves can be flat or slanted down at 10º

Lighting

- 3500K LED top light

Agency Approvals

- UL, C-UL and UL Sanitation listed to NSF-7, Type II conditions
- DOE 2017 compliant

OPTIONAL ACCESSORIES

- ☐ White interior (including shelves)
- ☐ Stainless steel interior (including shelves)
- ☐ Stainless steel shelves in lieu of black
- ☐ Additional lighted 3500K LED shelf
- ☐ орллY [95 ƒ1Ǝ Ků ōŜƒ2ø ăЌŜƒØŜă
- ☐ Deli meat pegs
- ☐ High-capacity condensate evaporator assembly
- ☐ Self-cleaning condenser
- ☐ {ű1·λyƒŜăă ăűŜŜƒ ŜĚűŜ№λ2№ ƒλyλăЌ
- ☐ wŜƒƒŜŎűλØŜ Ǝƒ1·ăă ŜyŘ LJ1·yŜƒă
- ☐ {2ƒλŘ ŜyŘ LJ1·yŜƒă óYλ№№2№ŜŘ λyűŜ№λ2№ú
- ☐ t№ŜYλdzY ŜĚűŜ№λ2№ ƒ1·Yλy1·űŜ ódzLJLJŜ№ ă2ƒλŘ ŜyŘă 2yƒěú
- ☐ Graphics package
- ☐ Clear or reflective glass, sliding rear doors (Solid hinged on 36" cases)
- ☐ Black polycarbonate removable locking security cover
- ☐ Roll-Down locking security cover (black, white, or grayú

***Additional options available on the website and price list.**

Made in America

DOE 2017 Energy Efficiency Compliant

c UL us

ANSI/NSF 7

R REVIT

WARRANTY*
One year Parts and Labor
2nd thru 5th year part only
service compressor
(U.S.A. and Canada)

Note: Information is subject to change at any time. Visit www.federalind.com for the most current specs.

Revised 6/9/2023

AIA #	**VISION SERIES - Square Ends Self-Serve Refrigerated Slide-In Display Case - 60"**
SIS #	Product Specifications

Intended Environment: Type II (Self Contained) - Designed to operate in maximum ambient conditions of 80°F (24°C) and 55% relative humidity.

Zone	Intended Product To Be Displayed	Avg Prod Temp °F/°C
All	Packaged Refrigerated Products	38°F / (3.3°C)

DIMENSION: xx"/(mm)
DIMENSION TOLERANCE +/-
0.25 (6.4)

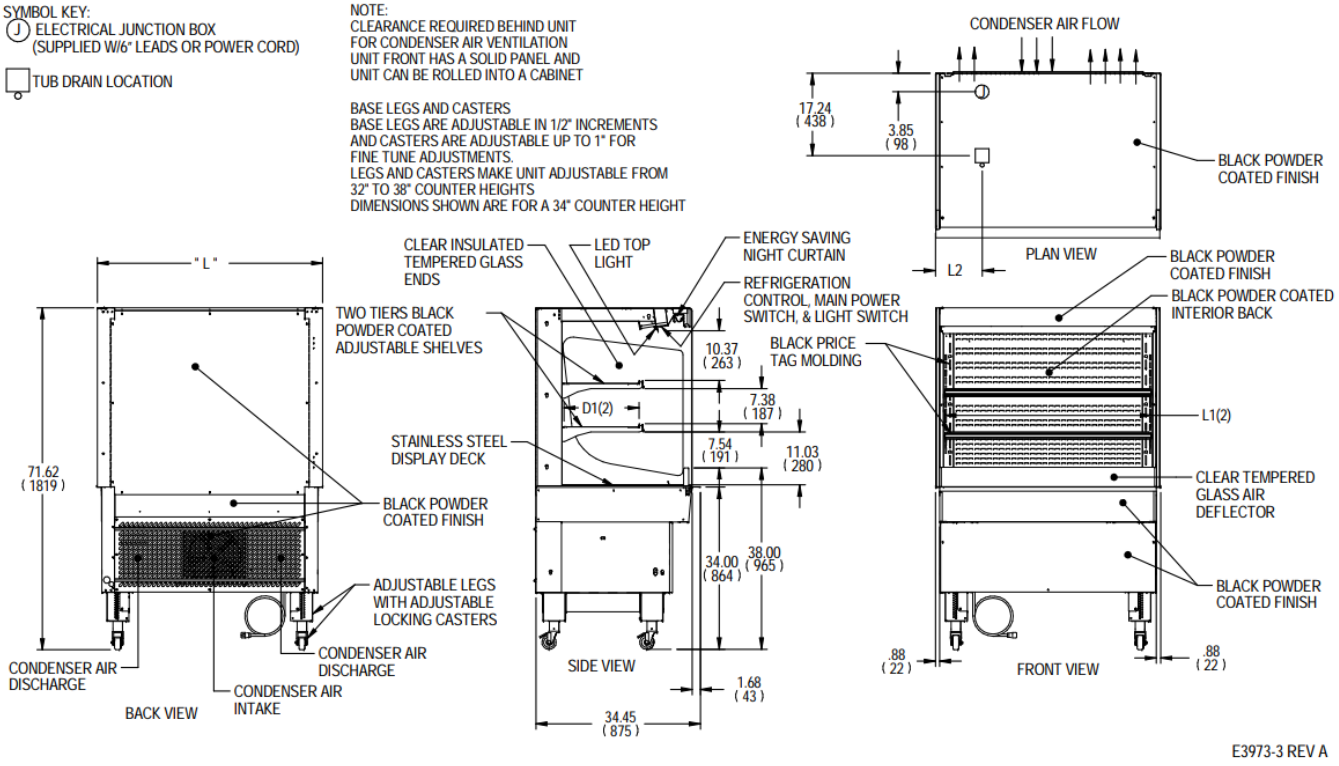

MODEL	DIMENSIONS			TUB DRAIN	SHELVING			INTERIOR VOLUME CU FT	ELECTRICAL	STANDARD CONNECTION CORD & PLUG			REFRIGERANT	C.U. HP	CONDENSATE REMOVAL	SHIP WEIGHT
	L	D	H	L2	# OF TIERS	L1	D1		2 WIRE + GROUND	AMPS	MAX FUSE SIZE	NEMA CORD &				LBS
	in	in	in	in		in	in									KILO
	mm	mm	mm	mm		mm	mm									
VRSS3660S-SLD	36	33	71.6	6.74	2	32.25	16.634	13.98	120/60/1	12.7	20	NEMA 5-20P	R449A	3/4	INTEGRATED PAN	535
	914	838	1819	171		819	423									243
VRSS4860S-SLD	47.25	33	71.6	13.49	2	43.25	16.634	18.48	208-240/60/1	12.5	20	NEMA 6-20P	R449A	1	INTEGRATED PAN	620
	1200	838	1819	343		1099	423									281
VRSS6060S-SLD	59.25	33	71.6	14.12	2	55.25	16.634	23.39	208-240/60/1	13.5	20	NEMA 6-20P	R449A	1-1/4	INTEGRATED PAN	755
	1505	838	1819	359		1403	423									342
VRSS7260S-SLD	71.25	33	71.6	20.12	2	67.25	16.634	28.30	208-240/60/1	13.7	20	NEMA 6-20P	R449A	1-1/4	INTEGRATED PAN	845
	1810	838	1819	511		1708	423									383

- Case temperature will vary if the air curtain is disrupted.
- Due to continuing engineering improvements, specifications are subject to change without notice

DOE 2017 Energy Efficiency Compliant

c UL us

ANSI/NSF 7

FEDERAL
The Signature of Quality

FEDERAL INDUSTRIES
A Standex Company
215 Federal Avenue Belleville, Wisconsin 53508-9201

Phone: 800-356-4206
Fax: 608-424-3234
Email: Geninfo@Federalind.com
Website: Federalind.com