CROSSFIRE

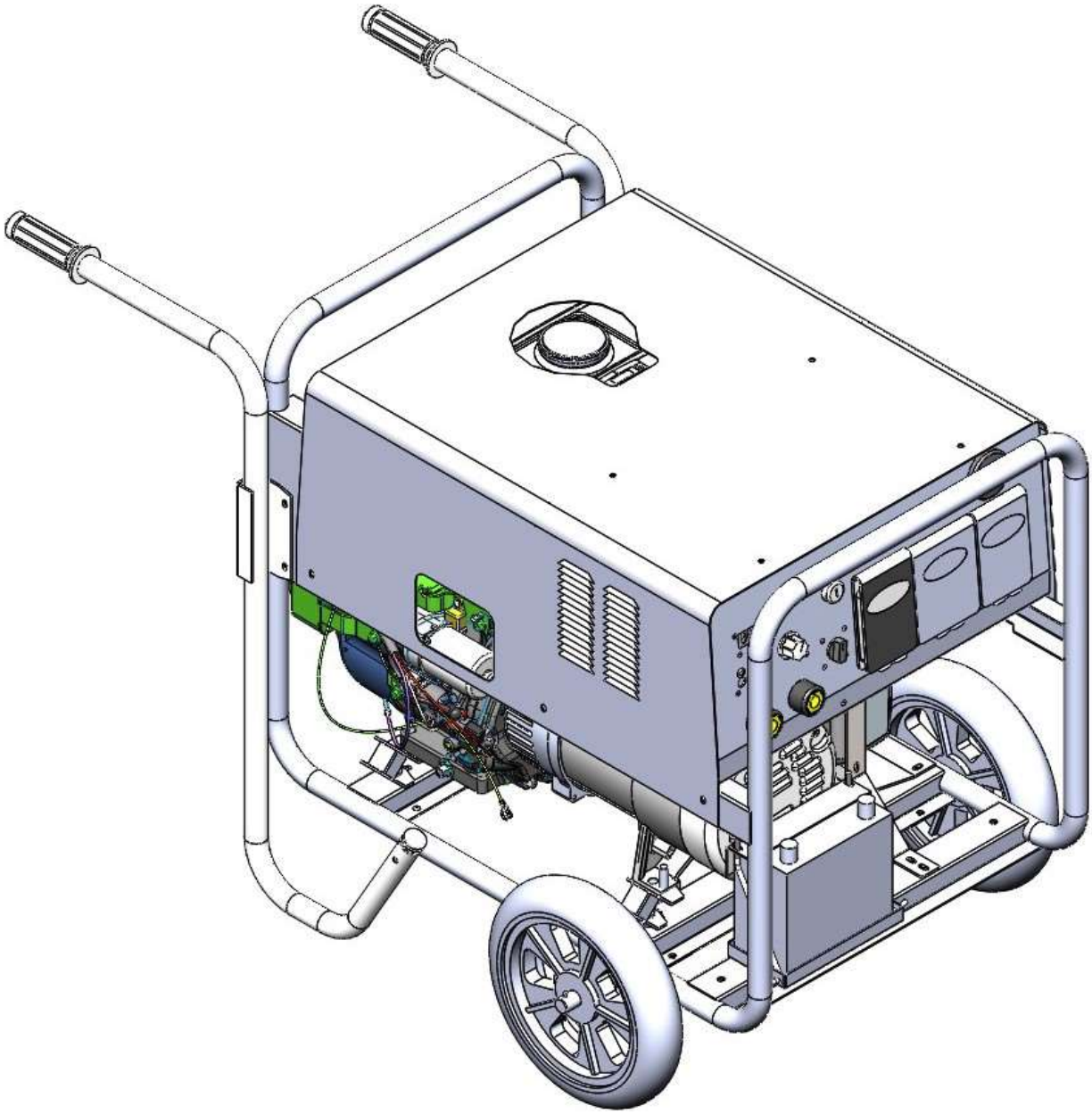

ARGO195 GASOLINE WELDING GENERATOR (ELECTRIC START)

OPERATOR`S MANUAL

Respected Customer:

The detailed information provided here in below, which contains the installation, trial run, operation and maintenance of "ARGO 195 Gasoline Dynamotor and Welding machine", is intended for your kind perusal to help you minimize the operational problems so that the product can work as smoothly as it is expected.

Warning! * TO OPERATE AND MAINTAIN BY SPECIALIZED PERSONNEL, REPAIRED BY THE PROFESSIONAL PERSONNE ONLY.

* ANY OPERATION AND MAINTAINECE BEFORE READING THIS MANUL IS NOT ALLOWED.

Attention! * Please use the SAE10W30 engine oil, replace the oil 10 hours for the first usage, and then changes the oil every 50 hours.

* Do not connect with general alternating current!

* Please read this manual carefully!

INDEX

1、Brief introduction to ARGO 195 Gasoline Welding Generator

ARGO 195 Gasoline welding generator is using gasoline engine for power generating. Gasoline chemical energy is transformed to mechanical energy, then to electric energy. The product could be used as welder and generator. The advantage is that it could not be influenced by the power grids, also it can be used at no power supply field for electric generating and welding, which is necessary equipment for mining and mechanical engineering, and also could be applied to enterprise and public institution.

CUB 190 Gasoline welding generator function features:

1. Power output:120 /240V,60Hz, 6 KW;
2. Welding current: 20A-195A;
3. Electrode diameter: 1.6-5mm;
4. Welding current is adjustable by knob;

2. Safety Operation

2.1 Safety Notice

(1) Electric shock may cause death

- Wear dry labor protection appliance;
- Don’t touch work piece or to ground line;
- Don’t touch electriferous parts;
- Don’t touch “+” and “–”;
- Use recommended welding cable;
- Earth cable clamp should be near welding area;
- Close power output main switch during welding.

(2) Exhaust gas from generating and welding is hazardous to health

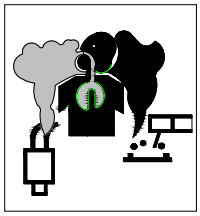

- Read generator and welding rods spec. carefully;
- Keep away from exhaust gas;
- Exhaust gas may cause serious nausea, dizziness, even death;
- Work in house, keep good ventilation, or wear respiratory protective devices;
- Work outside, choose clear field with good ventilation.

(3) Welding arc light is harmful to eyes

- Wear welding protective mask, watch welding arc through filter glass;
- Use welding mask conforming to national standards;
- Protect exposed skin in case of any hurt;
- Notice peoples around before welding work.

(4) Battery explosion may cause blindness even death

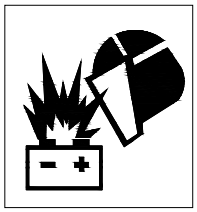

- Power off before repair work;
- Don't take repair work around naked flame area;
- Wear protective mask and rubber gloves;

(5) Fire prevention

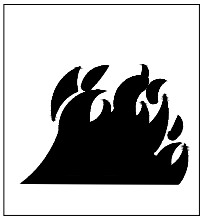

- Keep away from explosive and flammable materials at least 11 meters;
- Prevent sparks to cracks or shady place;
- Fire extinguisher should be allocated at working area;
- No welding sealed vessel.

(6) Acid liquor in battery may cause textile to corrode;

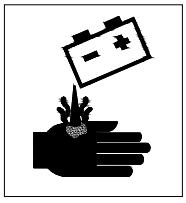

- Wear exposure suit and rubber gloves;
- Keep vertical shifting of battery, avoid any slant.

(7) Hot parts may scald people

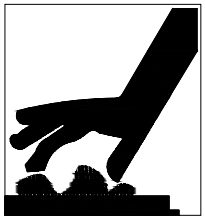

- No touching on just finished welding parts;
- No touching on just finished welding electrode holder.

(8) Welding may cause harmful magnetic field

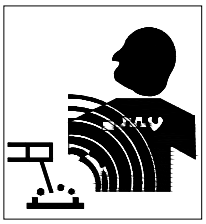

- Irrelevant people keep away from welding area;
- When welding, put welding holder cable and earth cable at the same side of worker;
- When welding， do not wind the welding cable around worker's body;

⑼ **Welding may cause fire or explosion**

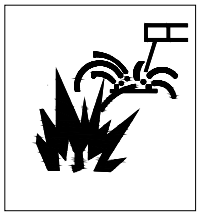

- Do not do welding work near flammable and explosive materials;
- Allocate the fire extinguisher in case of fire;
- No welding at the parts' flammable surface;
- No welding sealed vessel.

⑽ **Parts may cause serious personal injury during working**

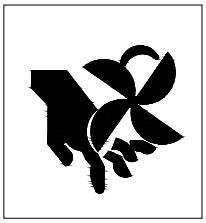

- Keep away from working parts;
- Switch off before repairing machine;
- Lock all machine doors, panels, covers and protector or be located at safe position.

2.2 Operator's self-protection

* Be sure to follow labor's safety and sanitation rules, wear suitable labor protection appliance in case of any injury to eyes and skin.
* Shield the head with protective mask during welding work, and watch arc only through filter glass window on the mask.
* No touch on work piece in case of any electric shock accident in welding;
* No touching on the both poles (Electrode holder pole and work piece pole) from welder output at the same time by any parts of body without insulation.
* No welding vessel with flammable and explosive materials or sealed vessel.
* No operating at very humid filed.
* Prevent flying sparks from hurting people.
* No touching on any position of engine or load by hands no matter they are wet or not.
* Exhaust gas from welding and generating is harmful to health. Keep good ventilation.
* Welding arc light is harmful to health, keep eyes away from arc light.
* Do not approach the machine working parts with the hands, hair, tools or loose clothes.
* Only professional staff should install, test and repair the machine.
* When switch off engine, repairing work, fuel and engine oil charging should be start till engine cooling.
* No smoking, and keep away from any flame when charging fuel.

2.3 Operator's notice

* ARGO 195 gasoline welding generator belongs to electrical products. Do not switch or modulate over exert in case of damage to components.
* Check welding cable every time before work, connection right and reliable or not, earth connection reliable or not.
* Exhaust smoke is not good for health. Operation should be at ventilation and smoke evacuation area.

* There will be sparks flying during operating, keep distance between working field and vicinity.
* Operating should be within duty-cycle. Over load will cause accelerated components aging and decreased use life, even machine damage.
* Do not modulate or move the machine during operation.
* Welders have strong electromagnetism and frequency interference, so keep away people with heart pacemaker or the articles which can be interfered by electromagnetism and frequency.
* Do not squeeze or smite the welding cable.
* Do not allow irrelevant people go to welding operation field.

2.4. Safe Measures to be taken to assure the correct Installation and Position

* Precaution must be taken to keep the operator and the machine from the foreign materials falling from up above.
* The machine must be installed in the place where it can not be exposed to sun and rain. Also it must be stored in less humid place with the temperature range at −10~40°C.
* The machine should be placed at horizontal position, in case of turnover or shift.
* There should be 50cm space about for the welding machine to have good ventilation.
* Make sure that there is no metal-like foreign body to enter the welding machine
* Make sure that there is no interference with the surrounding area at the installation site.
* Take measures to prevent wind while operating in the strong wind since the welder is gas shielded.

2.5 Safety Check

Each item listed below must be carefully checked before operation:

* Make sure that the welding machine has reliable earth connection.
* Make sure input/output cable in good condition and no exposure.

Regular check needs to be conducted by the qualified personnel after the welder has been installed over a period of six months, which involves as follows:

* Routine cleaning needs to be done to make sure that there is no abnormal loose parts happening in the welding machine.
* The parts installed on the panel must guarantee that the welder works properly.
* Check the welding cable to see if it can continue to be used before it is worn out.

Notice: Cut off the power supply before opening the case to check.

Please do not hesitate to contact us for technical assistance whenever you come across the problems you can not work out or you may deem difficult to fix.

3. Technical Specification

3.1 Environment to Which the Product is Subject

* The surrounding temperature range: when working: -5 ～ ＋40 ℃
During transport or in storage: －25～＋55℃。
* Relative humidity: when at 40℃: ≤50%,
when at 20℃: ≤90%.
*The height above the sea: below 1000m
* Keep from raining when it is used outdoor.

3.2. Welding Generator's Principle（see the electric principle sketch）

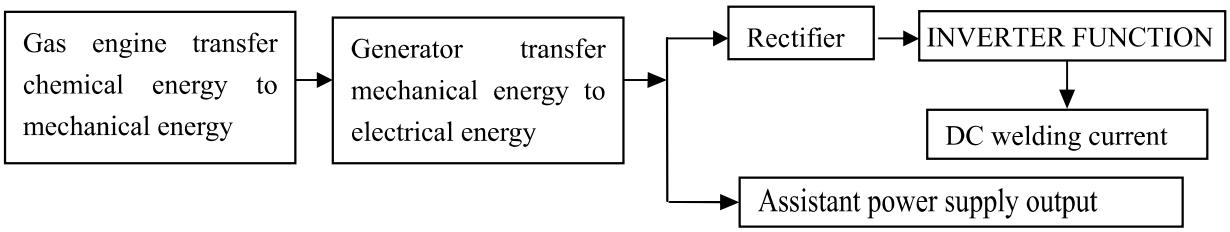

3.3. Main Technical Data　　Table（1）

Item \ Model			ARGO 195	
Generator	AC output	Rated Frequency Hz	60	
		Rated Voltage V	120 /240	
		Rated current A	50/25	
		Max. power KVA	6.5	
		Rated power KVA	6.0	
		Phase	Single	
		Power factor COSφ	1.0	
	Welding current DC	Welding mode	MMA	TIG
		No-load voltage V	78	78
		Rated current A	195	195
		Working voltage V	20.8-27.8	10.8-17.8
		Current range A	20-195	20-195
		Duty cycle（%）	30	30
	Excitation type		Self-excitation and constant voltage	
	Starting type		Manual / Electrical	
	Work type		8 hours continuous working	
Gasoline generator	Model		Kohler CH440	
	Type		Single cylinder, fan-cooled, four stroke	
	Output volume CC		440	
	Tank Dia. X Journey mm		89×69	
	Rated rotated speed rpm		3600	
	Fuel		Unleaded gasoline for vehicle	
	Fuel capacity		1.4Qt.	
	Rated power		14HP	
	Tank capacity		5 Gallon	
	Structure		Open	

	Fuel consume rate g/HP-H	230
Unit	（Length × Wide × Height） mm	1216×706×800（with wheel and handle）
	NW	309

3.4. Standard applied:

* **CAN/CSA-E60974-1**
* GB 15579.1-2004
* GB/T8118-1995
* GB 4208-93

3.5. Remark & Sign of Illustration

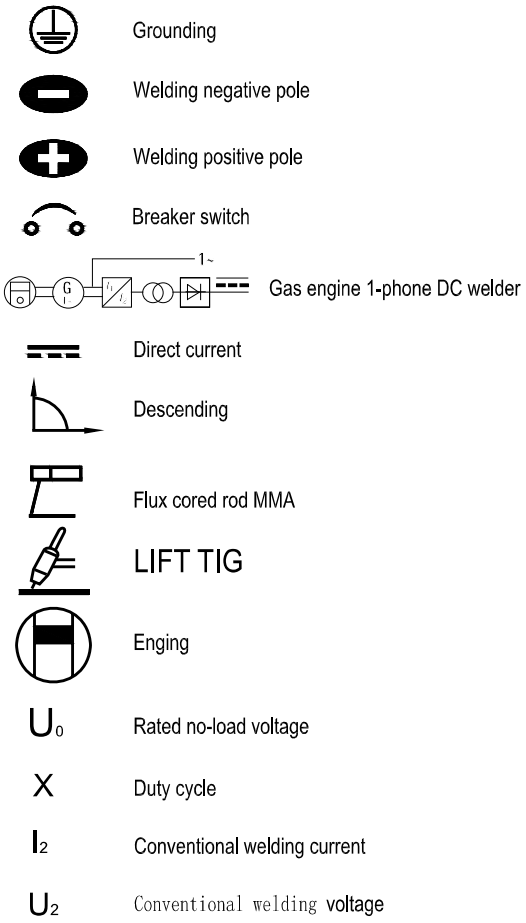

4. Control Panel

4.1. Control panel, parts name and function

Item	Name	Qty.	Function
1	Start handle	1	Start engine (refer to engine manual)
2	Fuel tank cap /dipstick	2	Fuel charging and fuel quantity measurement
3	Engine power switch	1	Start engine (refer to engine manual)
4	Key switch	1	Electric start switch
5	Welding current modulate knob	1	Adjust welding current
6	Welding current output terminal	2	Connect welding cable

7	Air switch	1	Main power switch
8	Circuit protection switch	2	Prevent the two sockets from overloading
9	120V power supply receptacle	2	120V 20A
10	240v twist lock receptacle	1	240V 30A
11	Fuel margin display	1	Indicate the remained quantity of fuel
12	Fuel tank cover	1	Fuel tank cover

4.2. Control Panel

Drawing（1）

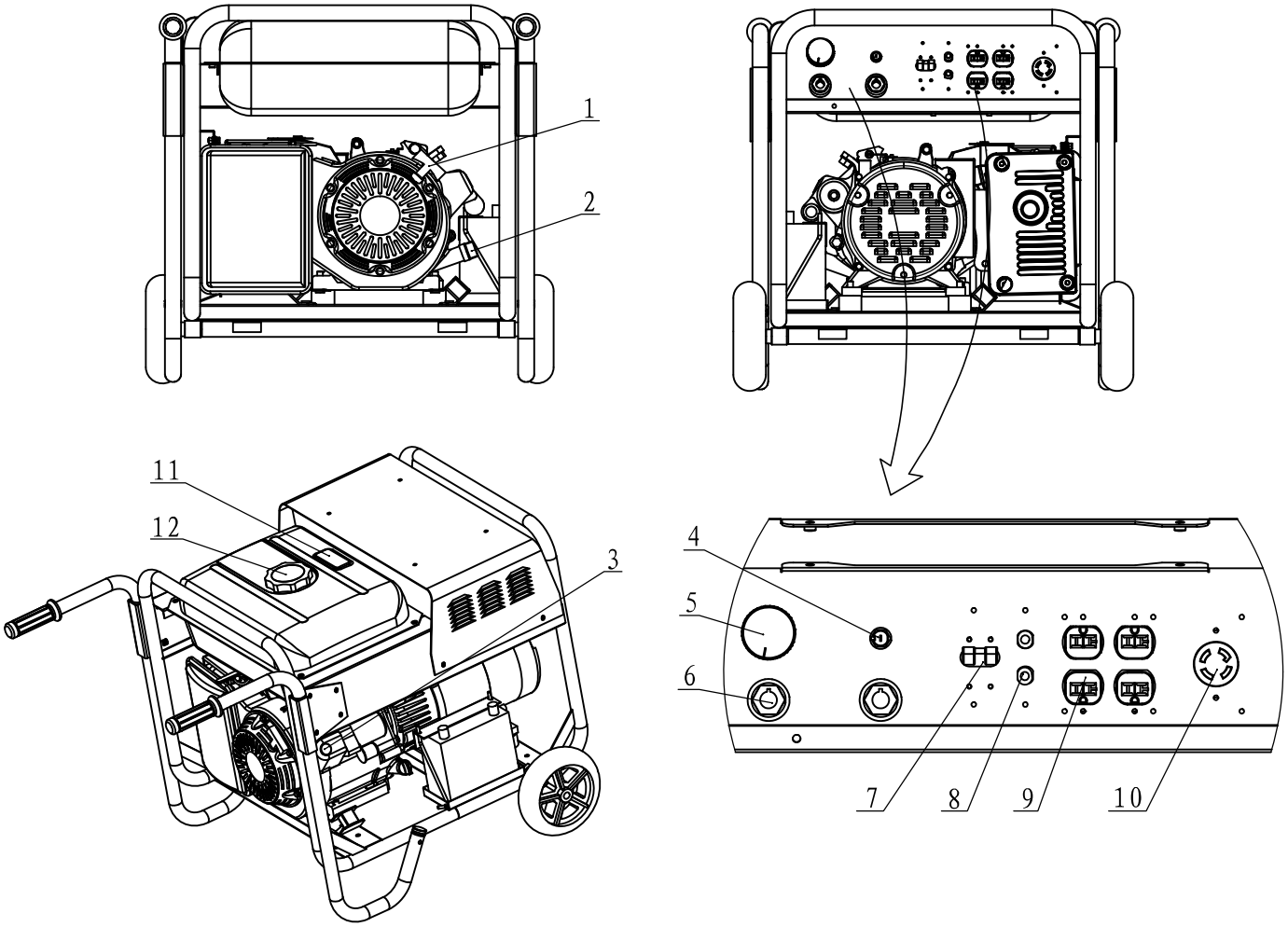

5、 Operation environment

5.1. Outdoor operation

5.1.1 The welder must be loaded in the place where less dust.

5.1.2 Avoid direct sunlight and place the machine at shady and cool area.

5.1.3 Place the machine at flat field in case of any shift.

5.2. Indoor operation

5.2.1 Operation should be at well ventilated place and exhaust waste gas to outside. Keep

away from air inlet and keep good ventilation during work.

5.2.2 There should be at least 1.5m space between any obstacle and air inlet or gas outlet.

5.2.3 Place the machine at flat field in case of any shift the brake wheel should be locked.

6. Checking Before Started

Check each part accordingly, keep safe environment and notice people before start.

6.1. Check gasoline engine oil

6.1.1 Check engine oil dipstick (refer to engine Manual)

6.1.2 Make up engine oil if it's lower than limit.

Notice:

After long-time running, the engine oil will reduce. Check and avoid engine oil lack.

6.2. Fuel check

Check fuel whether enough before start work. (Take off the sediment of fuel tank filter sieve periodically)

6.3. Oil pipe check

6.4. Protection grounding check

Check the protection grounding. The case should be reliably grounding.

6.5. Check to make sure no oil leakage

If leaking, please contact us or seller immediately.

6.6. Check whether the parts are loose.

Check and make sure not loosen of bolts, nuts and all the fasteners, especially air and acoustic filter. There should be no circuit broken, short and loose.

6.7. Check whether there are foreign objects inside or outside of the machine

6.7.1 Check whether there are tools or waste left inside, and get rid of them.

6.7.2 Check whether there are waste and flammable bodies around acoustic filter.

6.7.3 Check whether there are waste at air inlet and outlet of engine.

6.8. Loading Matching

6.8.1 Make sure the capacitance can match the loading, which can make the machine work properly.

6.8.2 The welding cable diameter should be correct.

6.9. Battery useing

6.9.1 Find the battery under the frame assembly and connect the battery cables. (please note that you should connect the positive pole first, then connect the negative pole.)
If you don't need to use it for long time, you need to remove the negative pole firstly,
then remove positive pole at last.

7、Pre-starting Procedure

7.1. Check engine oil could meet scale every time before operation.

7.2. Check whether fuel is sufficient.

7.3. Turn fuel switch to “ON”.

7.4. Air door position

(1)Switch the air door to ‘close’ position

(2) When warmed or at the high temperature, the air door of engine should be switched to start position

7.5. Turn the switch of engine to “start” position

7.6. The pre-warning time should be 3-5mins

Notice: speed is adjusted in place before shipment. Do not adjust at will, which will cause engine rotation speed quicker or slower.

8. Starting Procedure

8.1. Process pre-starting procedure 7.1 to 7.6 completely。

8.2. Switch the air door to" on"。

8.3. Connect loading at normal loading ranges and check the voltage

9. Stop Procedure

9.1. Closing loading process so as to keep the machine at no-load status.

9.2. Switch the engine to "stop" position

9.3. Shut down the fuel switch

10. Welder, generator operation

10.1. Prepare machine and all relative work.

10.2. Choose correct welding cable and connect the power supply. Connecting lug and terminal must be reliable in case of poor contact burning. Cable diameter should match the standard 5~7A/mm^2 current flow.

10.3. Keep good ventilation; do not put other things on the machine so as to avoid any negative influence to heat elimination.

10.4. Choose correct welding electrode according to work piece thickness.

10.5. Start machine step by step according the Operator Manual. After 5 minutes stable running under no load status to heat engine, then start welding or power outlet.

10.6. Welding current should be adjusted according work piece thickness and electrode. There is welding adjusting knob.

10.7. Welding current for different electrode diameter

Table（2）

Welding Dia.(mm)	2.0	2.5	3.2	4.0
Welding current（A）	50-65	60-80	100-130	140-190

Notice: when welding, not using generating. Switch off power outlet in case of any hurt to people by wrong operation.

Notice: when generating, remove welding cable.

11. Simple fault examination guidance

Repairman could distinguish "Normal" and "Abnormal" situation. The guidance is useful for you under the condition that you don't have any test equipment or measure instrument repairman. Control panel components failure checking needs measure instrument. If you doubt of control system problem and could not figure out by vision, please ask distributor for help.

12. Failure and repair

12.1. Regular check and maintenance table (3) (Besides Daily check, others by hour）

Regular check is important to gasoline engine function and lifetime. Check items and agenda as below.

△check and clean ◆Replace

Table（3)

Machine	Check and maintenance items	Daily check	50	250	500	1000
Engine	Check engine oil volume and purity	△				
	Fuel and waste check	△		△		
	Check oil leakage	△				
	Check components looseness	△				
	Check exhaust gas color	△				
	Change engine oil		1st	◆		
	Clean air filter			△		
	Change piston ring				◆	
	Clean engine oil filter					△
	Change air filter components					◆
	★check engine valve space			1st		△
	★Adjust fuel nozzle					△
	★Checking fuel spout time					△
	★Check anti-shock feet					△
	Check nylon tube and rubber tube					△
Generator	Check ground connection	△				
	Measure Insulation resistance			△		
	Check circuit terminal and connection parts				△	

Note：“★”means check should be carried by technician or with special tool, please contact

distributor.

For “ 1st” it should be the initial checking and process regular checking hereafter。

12.2. Notices:

11.2.1 Rotation parts: Danger!

There are high-speed moving parts in the machine.

Stop the machine before Inside check and maintenance

11.2.2 Electric shock Hazard!

There is high voltage part in working machine.

Stop the machine before Inside check and maintenance

11.2.3. There are some high temperature parts inside of the machine, it’s very dangerous.

① Please stop the machine firstly, and then maintain the inner of the machine.

② The engine cover is still heat after the machine shut down. Please be carefully.

12.3 The fault and removes

（table 4）

Breakdown		Analysis	Solutions
The engine can not start	Motor doesn’t work, Or the running speed is too slow.	Imperfect earth	Repair
		Starting switch is bad	Replace
		Starter is bad	Replace
		Lead short circuit	Repair
	The starter running, But not start-up.	Lack fuel	Filling Fuel
		The hole on the fuel oil filter is blocks up	Clean or replace
		Take off the air is bad	Let out the air
		Fuel cylinder type winding not working	Examine the fuse. If it breaks off, please replace a new one. Check and replace the cylinder type winding
	Under low temperature The machine cannot start	Fuel frozen	Use winter oil
		Some frozen water in oil system.	Heating. Discharge the water in the fuel tank , fuel filter and inner of fuel pipeline inner
		Poor air discharge in oil pipe	Let out the air
The machine auto-stop, and the running speed can not reach the standard.		The hole on the fuel oil filter is blocked up	Replace the accessories of fuel filter, after cleaned, please replace the filter
		Air filter is blocks up	Replace the element of air filter
Machine Stops because oil pressure comes down		Lack oil	Filling oil
		Oil pressure switch is bad	Replace switch
		The hole on the engine filter is blocks up	Replace filter
Can not reach the highest running speed		Adjuster pole location is incorrect	Adjust（step on the gas）
		There are air interfused the fuel pipe	Let out the air
Unload running speed is too		Adjuster pole location is incorrect	Adjust（ slow down the accelerograph）

high			
Unload running speed is too low		Adjuster pole location is incorrect	Adjust（step on the gas）
		There are air interfused the fuel pipe	Let out the air
Large Shake		Anti- shake feet was not Tighten	Tighten
		Generator was not tighten	Tighten
Noise	Engine	Noise	Repair
	Generator	Bad bearing	Replace
		Loose fasten screw	Fasten
	Cover	Noise	Repair
Over heat		Check the enviornment	Get rid of objects surrounded
Wrong voltage		Short circuit when loading	Check
		Abnormal rotate speed	Adjust rotate speed to rated value
		Rotor cable short circuit	Repair
		Engine cable burning	Repair
Can not reach the rated voltage		Over load	Reduce loading to rated value
		Low rotate speed	Adjust accelerograph to rated speed
		Generator cable burning	Repair
		Low rotate speed	Increase the rotate speed
		The length of cable between generater and loading is too long or the section of cable is too small	Adjust fix position toshorten the distance, and oversticking the cable dia.
Voltage drops when loading		Main winding and the winding are burned	Replace motor
		Overload	Reduce loading to rated power
		Welding winding is burned	Replace motor
Welding current is abnormality		Running speed is too low	Adjust the accelerograph and increase the running speed

13. Components List

13.1. Explored drawing (refer to drawing 2)

13.2. Components list（refer to drawing）Table（5）

Table（5）

Part No	Designation	Oracle code	Qty
1	Enclosure	11010012621	1
2	Fuel Tank	20400080481	1
3	Carbon Tank	20400080480	1
4	PCB Module Cover	11020014635	1
5	PCB Module Enclosure	11020014636	1
6	Inverter PCB	11050110951	1
7	EMC PCB	11050110781	1
8	PCB Module Support	20050050013	1
9	PFC Inductance	20070040035	1
10	Rectifier PCB	11050110733	1
11	PFC PCB	11050110768	1
12	Filter Reactor	11040030115	1
13	Fan	20070890242	1
14	Air deflector	20050051015	1
15	Muffler Right Support	11020016932	1
16	Muffler	20070620097	1
17	Shock Absorber 1	20050051233	4
18	Muffler Support Welding	11020016444	1
19	Muffler Front Support	11020016889	1
20	Wheel	20050070059	2
21	Control Box Welding	11020016443	1
22	Hour Meter	20070330125	1
23	Socket	20070570260	1
24	GFCI Socket	20070570425	2
25	Socket Cover 1	20050050440	1
26	Over Currrent Protect	20070800050	2
27	Socket Cover 2	20050050439	1
28	Circuit Breaker	20070800117	1
29	Power Switch	20070800661	1
30	Knob	20070110010	1
31	Quick Connector	20070570185	2
32	Front PCB	11050040125	1
33	Electric Start	20400080647	1
34	Shock Absorber 2	20050050759	4
35	Alternator	20070620092	1
36	Axle Welding	11020013117	1
37	Hook 1	11020013118	1
38	Battery	20070300009	1
39	Hook 2	11020013119	1
40	Flat Washer	20060170035	2
41	Cotter	20060210020	2
42	Battery Support	11020013129	1
43	Frame Welding	11020016442	1
44	Kohler Engine	20070400156	1
45	Left Handle	11020013115	1
46	The End Cover of Handle	20050120069	2
47	Left Handle	11020013116	1
48	Handle Cover	20050050230	2

14. Main circuit chart (Refer to drawing 2)

15. Complete Set Specification Table（5）

Item	Description	Quantity
1	ARGO 195 gasoline welding generator	1set
2	Manual	1pcs
3	Engine manual	1pcs

16. Transport & Storage

The machines should be free from rain and snow during transportation and storage. The warehouse should keep dry & ventilation and free from corrosive gas or dust. The tolerable temperature ranges from －25 (with no cooling water) ～＋55℃ and the relative humidity can not be more than 85％.

17、Quality Guarantee

Users are advised to operate in compliance with the stipulations given in the manual. On condition that the welder is installed, stored, used, maintained, kept properly in compliance with the guideline, we guarantee to get the welder repaired at our expense within 12 months upon the purchase of welder if and when the welder is found either damaged partially or working improperly.

Explosive view（2）

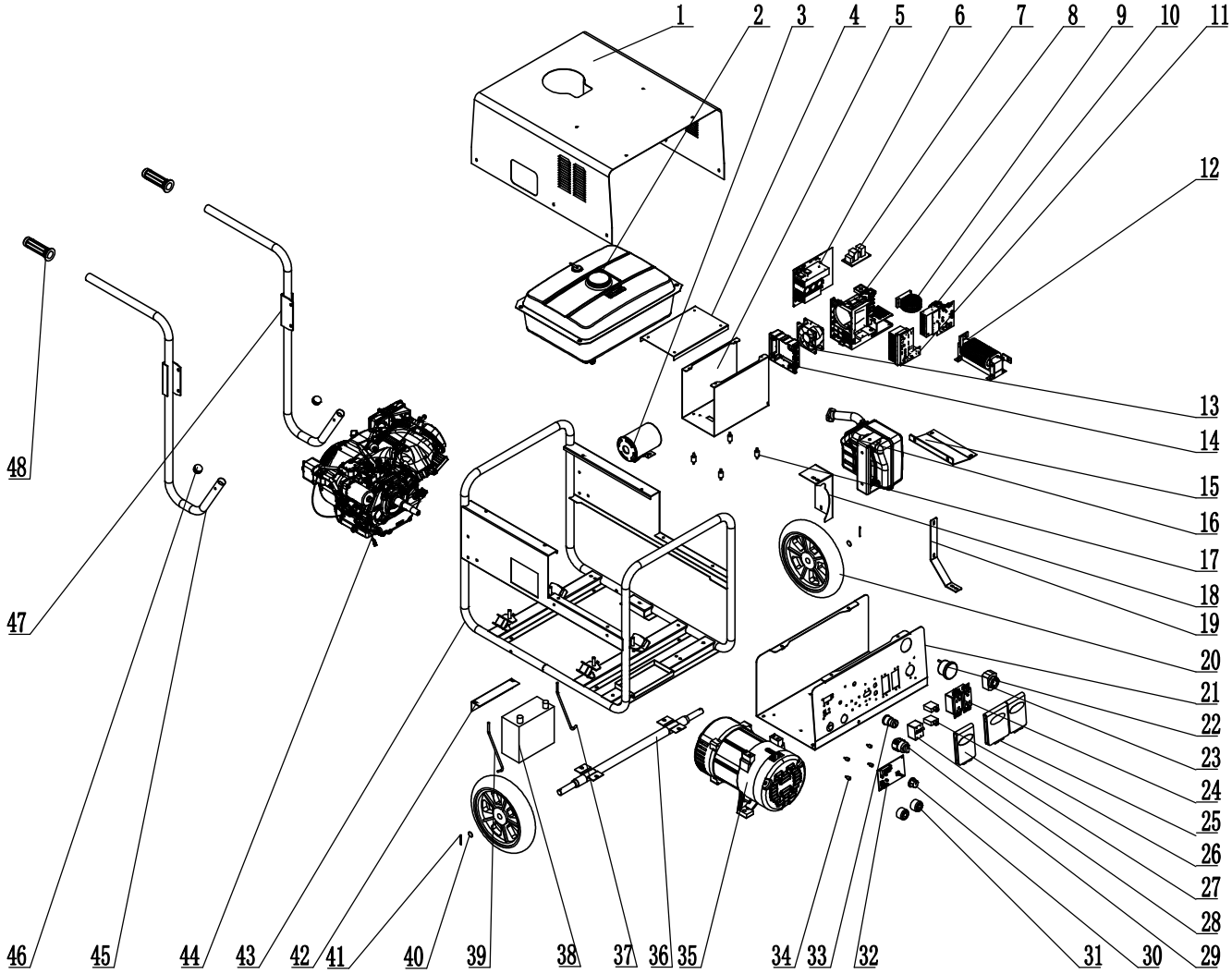

Drawing 2 Main circuit chart

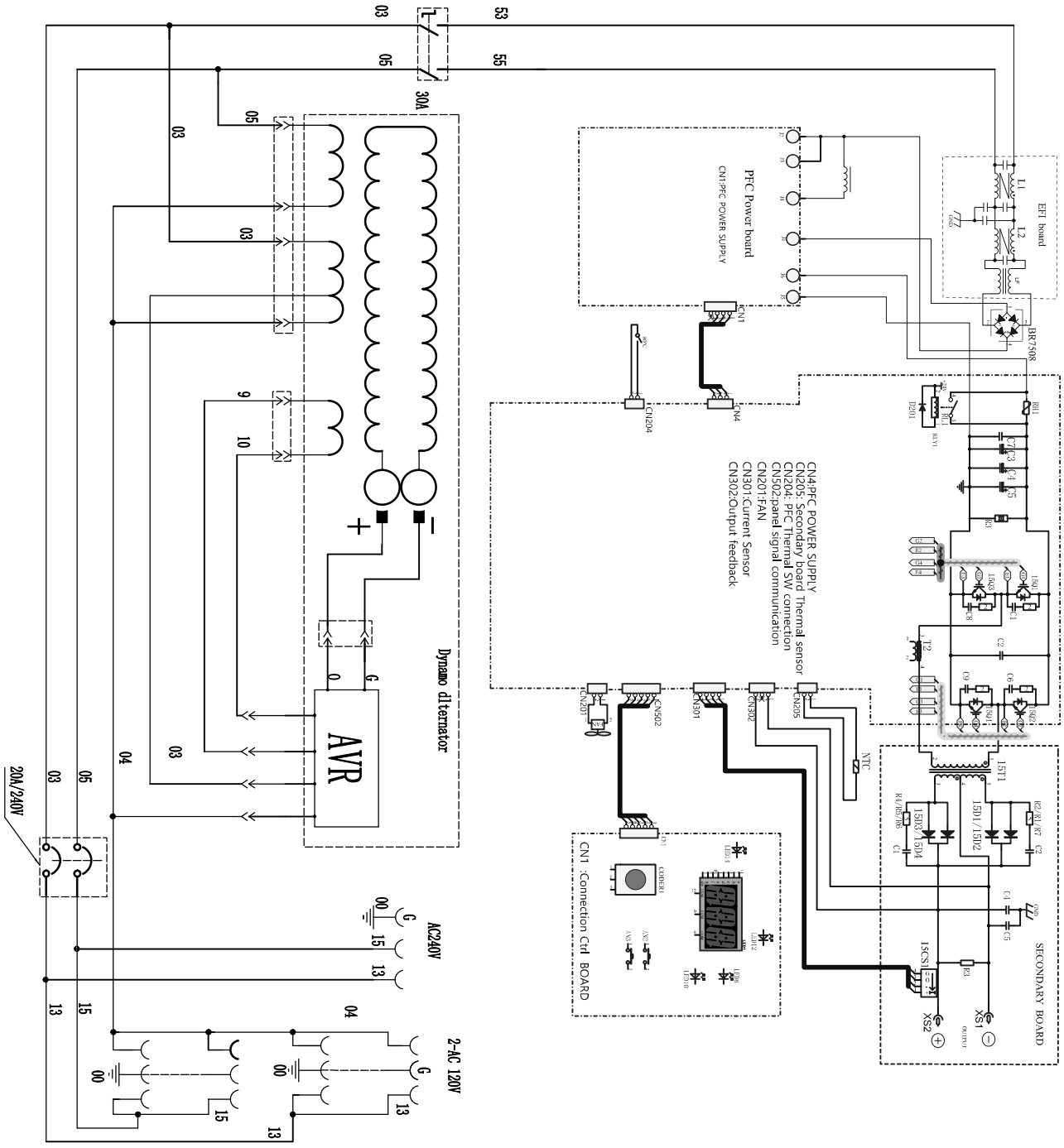

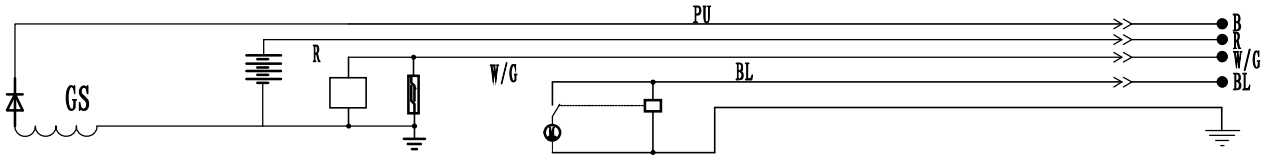

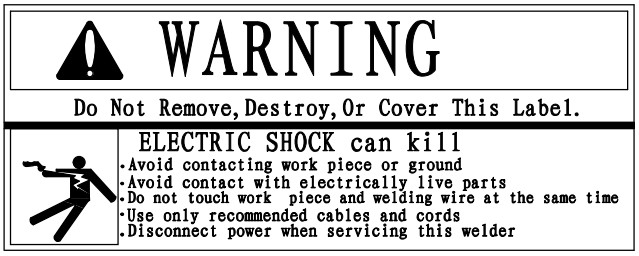

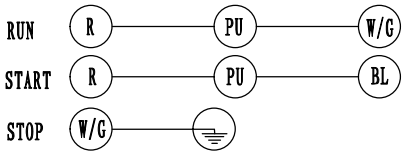

CROSSFIRE®

LIMITED WARRANTY

Effective April 14, 2018

(This limited warranty supercedes all prior warranties and is exclusive with no other warranties or garuntees implied.)

This warranty applies to the original purchaser and is subject to the terms and conditions listed below. This Limited Warranty is for new equipment sold after the above date, providing coverage for defects in material and workmanship at the time it is shipped from the factory.

Limited to the warranty periods below, Crossfire Equipment or an approved Crossfire Repair Centre will repair or replace the item under warranty that fails due to defects in material and workmanship. Crossfire must be notified within 30 days of the failure, so as to provide instructions on how to proceed with the repair of you welder and warranty claim processing. Warranty period begins at the time the welder is purchased from Crossfire, or 1 year after delivery to a distrbutor, whichever comes first. **Keep your receipt as proof of purchase.**

1. **3 Years - Parts & Labour**
Crossfire Welders and Plasma Cutters including - transformer, reactor, rectifier, solenoid valve, PC Board, switches, controls, gas valve, drive motor, drive system (drive roll excluded), and any other part the requires the removal of sheet metal.

2. **1 Year - Parts & Labour**
CG1-Dart Track Cutter (excluding tracks)
Welding positioners,turning rollers, Auto darkening lens, PAPR blower & battery,
Rheostat, Water Cooling Systems.

3. **90 Days - Parts & Labour**
Parts for Crossfire MIG guns, TIG Torches, Plasma Torches, Foot Controls, Spool Guns, Regulators & Gauges,welding carts, and welding cabinets. This warranty covers the absence of defective parts or those parts as listed under "Warranty Exclusions".

4. **Engine Warranty**
The engine on this unit is warranted separately by the engine manufacturer. Please see the engine manual.

5. **Warranty Exclusions**
This limited warranty shall not apply to: consumables such as; contact tips, nozzles, liners, drive rollers, plasma cutting torch tips and electrodes, welding gloves, auto-darkening helmet outside/inside lens, weld cables, ground clamps, and any crossfire products that fail due to normal wear. Items furnished by Crossfire Welders, but manufactured by others, such as accessories and engines.

6. Voiding Warranty
The limited warranty is void if the Crossfire product has been repaired, changed, or modified by anyone other then Crossfire Welders or an Authorized Crossfire Repair Centre. Equipment that has been improperly installed, misued based on standard operating procedures and industry standards, or has not been reasonably maintained.

ANY AND ALL WARRANTY CLAIM TRANSPORTATION, FREIGHT COST, AND RISKS WILL BE AT THE SOLE RESPONSIBILITY OF THE OWNER.

TO THE EXTENT PERMITTED BY LAW, THIS LIMITED WARRANTY AND THE REMEDIES HEREIN ARE THE SOLE AND EXCLUSIVE REMEDIES OF THE PURCHASER IN RESPECT TO CROSSFIRE PRODUCTS. IN NO EVENT SHALL CROSSFIRE WELDERS BE LIABLE FOR ALL INDIRECT, DIRECT, SPECIAL, INCEDENTAL AND CONSEQUENTIAL DAMAGE, LOSS, EXPENSES OR LOSS OF PROFIT. ANY WARRANTY NOT PROVIDED HEREIN AND ANY IMPLIED WARRANTY GAURANTY OR REPRESENTATION ARE EXCLUDED AND DISCLAIMED BY CROSSFIRE WELDERS.

Warranty Claim
This is a parts and labour warranty. Warranty claim options will be decided at the sole discrection of Crossfire Welders, which exclusively include (1) repair; or (2) replacement; or, if approved (3) cost of repair at an approved Crossfire repair center; or (4) credit (less depreciation). Do not return your unit to the retail or distribution area where it was purchased. Retain your receipt in case a warranty claim is needed. No warranty will be provided without the original receipt from retailer. To make a warranty claim, please contact crossfire@mapcanadaltd.com. No Crossfire warranty service can begin without a service file number including – Model # - Serial Number – Purchase Date.

HAVE QUESTIONS?
Toll-Free: 1-800-757-4445
Email: Crossfire@mapcanadaltd.com