MADDOX
INDUSTRIAL TRANSFORMER

Encapsulated Distribution Transformers

c UL us LISTED E203801

Single Phase NEMA 3R Enclosure
240X480 Primary Volts 120/240 Secondary Volts 60Hz

kVA	Catalog Number	Case Style	Approx. Dimensions(Inches)			Wiring Diagram	Approx. Weight (Lbs.)	Mtg Type W-Wall F-Floor	Temp. Class	Temp. Rise
			Width	Depth	Height					
0.05	EN1P05EFCU	C0	3.66	4.06	7.40	W9	6.2	W	130°C	80°C
0.10	EN1P10EFCU	C0	3.66	4.06	7.40	W9	7.0	W	130°C	80°C
0.15	EN1P15EFCU	C0	3.66	4.06	7.40	W9	7.9	W	130°C	80°C
0.25	EN1P25EFCUS	C1	4.09	5.08	8.39	W9	10.1	W	130°C	80°C
0.35	EN1P35EFCUS	C1	4.09	5.08	8.39	W9	13.2	W	130°C	80°C
0.50	EN1P50EFCUS	C1	4.09	5.08	8.39	W9	14.7	W	130°C	80°C
0.75	EN1P75EFCUS	C2	4.88	4.49	9.37	W9	19.4	W	130°C	80°C
1	EN1001EFCUS	C3	5.75	5.43	11.18	W9	26.2	W	130°C	80°C
1.5	EN11P5EFCUS	C3	5.75	5.43	11.18	W9	34.1	W	130°C	80°C
2	EN1002EFCUS	C4	6.93	6.38	11.65	W9	45.5	W	130°C	80°C
3	EN1003EFCUS	C4	6.93	6.38	11.65	W9	52.1	W	130°C	80°C
5	EN1005EFS	C5	10.31	8.43	14.92	W9	96.8	W	180°C	115°C
7.5	EN17P5EFS	C6A	10.94	9.06	19.29	W10	149.6	W	180°C	115°C
10	EN1010EFS	C6	10.94	9.06	21.65	W10	187.0	W	180°C	115°C
15	EN1015EFS	C7	12.05	10.31	23.62	W10	211.2	W	180°C	115°C
25	EN1025EFS	C8	14.49	11.69	27.56	W10	374.0	W	180°C	115°C
37.5	EN1037EFS	C10S	17.17	16.54	30.04	W10	517.0	F or W*	180°C	115°C

*Wall mount bracket available.

c UL us LISTED E203801

Three Phase NEMA 3R Enclosure
480 Delta Primary Volts 208Y/120 Secondary Volts 60Hz

kVA	Catalog Number	Case Style	Case Dimensions(Inches)			Wiring Diagram	Approx. Weight (Lbs.)	Mtg Type W-Wall F-Floor	Temp. Class	Temp. Rise
			Width	Depth	Height					
2	EN3002ABCUS	CT3	12.36	6.30	11.06	W7	52.8	W	130°C	80°C
3	EN3003ABCUS	CT3	12.36	6.30	11.06	W7	70.4	W	130°C	80°C
6	EN3006ABS	CT5	15.31	8.98	15.79	W7	136.4	W	180°C	115°C
9	EN3009ABS	CT6	17.56	9.13	17.76	W7	176.0	W	180°C	115°C
15	EN3015ABS	CT7	19.49	13.78	23.35	W7	349.8	F or W*	180°C	115°C
30	EN3030ABS	CT8	19.92	13.78	28.86	W8	501.6	F or W*	180°C	115°C
45	EN3045ABS	CT9	22.28	15.75	30.83	W8	693.0	F or W*	180°C	115°C
75	EN3075ABS	CT9A	26.97	17.72	33.19	W8	1331.0	F or W*	180°C	115°C

*Wall mount bracket available.

NEMA 3R Enclosure Dimensional Drawings

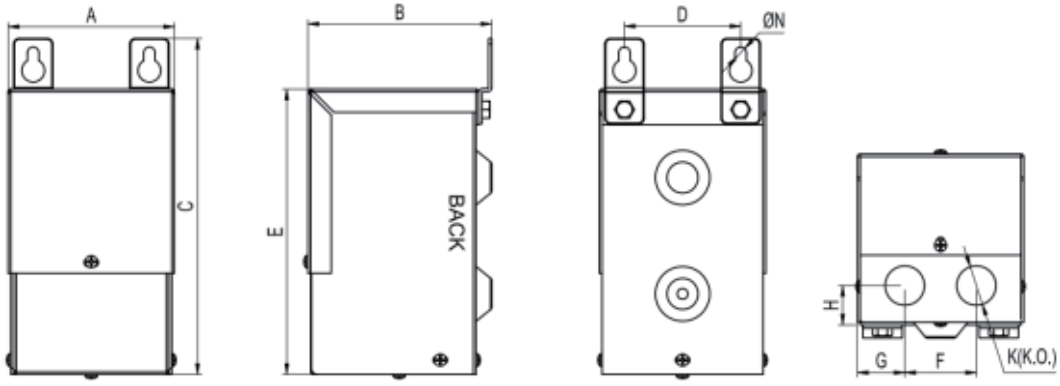

FRONT VIEW SIDE VIEW BACK VIEW BOTTOM VIEW

(DIMENSIONS IN INCHES)

CASE	A	B	C	D	E	F	G	H	K	N
C0	3.66	4.06	7.40	2.56	6.28	1.57	0.98	0.81	0.88	0.25
C1	4.09	5.08	8.39	2.56	7.26	1.57	1.20	0.91	0.88	0.25
C2	4.88	4.49	9.37	2.56	8.25	1.65	1.56	0.83	0.88	0.25
C3	5.75	5.43	11.18	4.13	9.51	2.36	1.63	1.08	1.10X1.38	0.31
C4	6.93	6.38	11.65	5.31	10.14	2.95	1.93	1.24	1.10X1.38	0.31

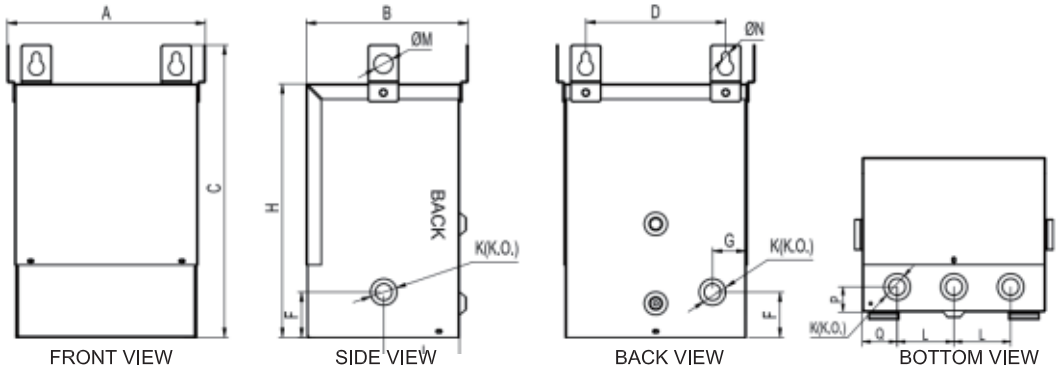

FRONT VIEW SIDE VIEW BACK VIEW BOTTOM VIEW

(DIMENSIONS IN INCHES)

CASE	A	B	C	D	F	G	H	J	K	L	P	Q	N	M
C5	10.31	8.43	14.92	7.28	2.36	1.75	12.89	3.94	0.88X1.38	2.95	1.24	1.75	0.43	1.00

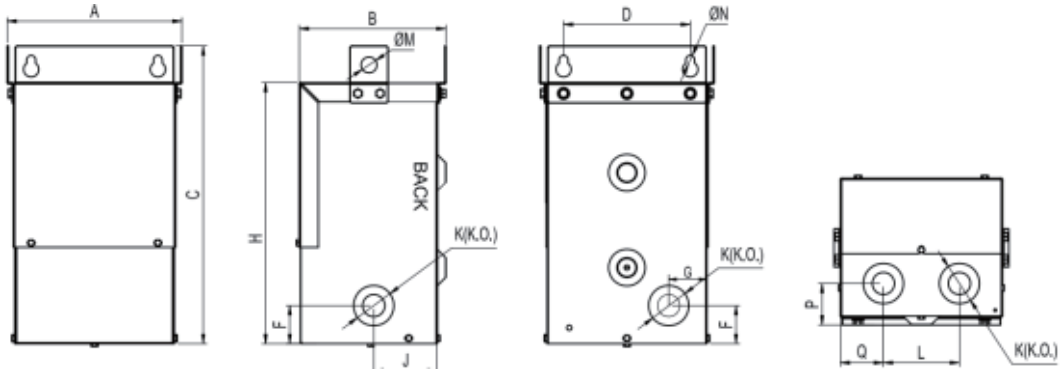

FRONT VIEW SIDE VIEW BACK VIEW BOTTOM VIEW

(DIMENSIONS IN INCHES)

CASE	A	B	C	D	F	G	H	J	K	L	P	Q	N	M
C6A	10.94	9.06	19.29	7.87	2.36	1.97	16.99	3.94	1.38X2.50	4.72	1.85	2.67	0.55	1.00
C6	10.94	9.06	21.65	7.87	2.36	2.36	19.37	3.94	1.38X2.50	4.72	1.85	2.68	0.55	1.00
C7	12.05	10.31	23.62	9.45	2.36	2.36	21.32	3.94	1.38X2.50	3.35	1.83	2.20	0.55	1.00
C8	14.49	11.69	27.56	11.02	2.36	2.36	25.28	5.91	1.38X2.50	3.94	1.77	2.80	0.55	1.00

NEMA 3R Enclosure Dimensional Drawings

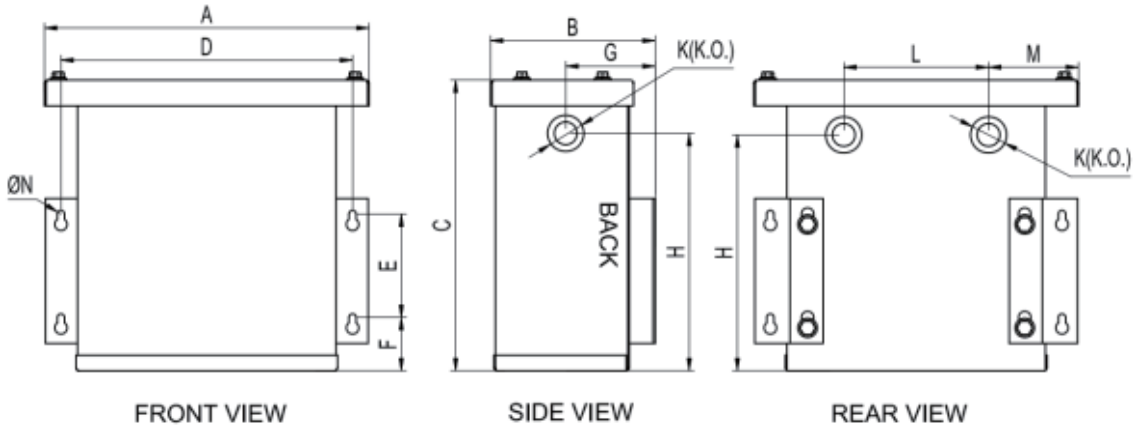

(DIMENSIONS IN INCHES)

CASE	A	B	C	D	E	F	G	H	K	L	M	N
CT3	12.36	6.30	11.06	11.10	3.94	2.03	3.41	9.04	0.88X1.38	5.57	3.43	0.28
CT5	15.31	8.98	15.79	14.53	6.30	3.01	3.21	13.11	1.38X2.50	5.91	4.31	0.39
CT6	17.56	9.13	17.76	16.77	6.30	4.19	3.41	15.14	1.38X2.50	5.91	5.83	0.39

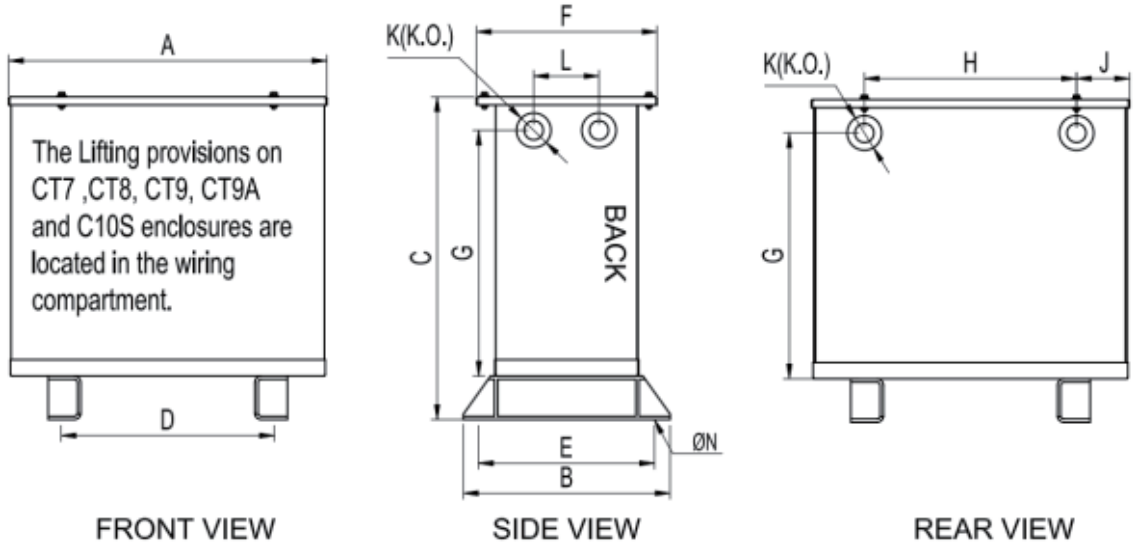

(DIMENSIONS IN INCHES)

CASE	A	B	C	D	E	F	G	H	J	K	L	N
CT7	19.49	13.78	23.35	11.81	11.81	13.07	16.99	11.81	3.84	1.38X2.50	4.72	0.55
CT8	19.92	13.78	28.86	13.39	11.81	12.64	22.50	9.84	5.04	2.00X3.00	5.12	0.55
CT9	22.28	15.75	30.83	15.75	13.39	14.41	24.47	11.81	5.24	2.00X3.00	5.51	0.55
CT9A	26.97	17.72	33.19	18.11	15.75	16.46	26.44	17.72	4.94	2.00X3.00	6.50	0.55
C10S	17.17	16.54	30.04	13.78	14.57	15.87	23.68	7.87	4.65	1.38X2.50	5.91	0.55

Electrical Schematics And Connection Diagrams

(W7)WIRING DIAGRAM

SCHEMATIC

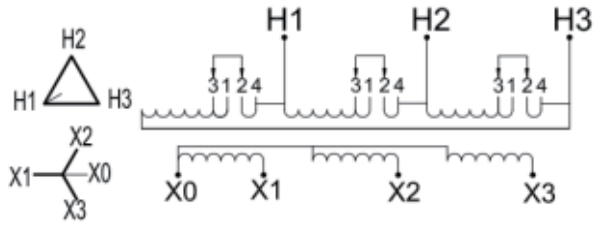

CONNECTIONS

% Voltage	Primary Volts	Connect lines to	Inter-connect
105.0%	504	H1,H2,H3	1-2
100.0%	480	H1,H2,H3	2-3
95.0%	456	H1,H2,H3	3-4

Secondary Volts	Connect lines to
208	X1,X2,X3
120	X1,X0 X2,X0 X3,X0

(W8)WIRING DIAGRAM

SCHEMATIC

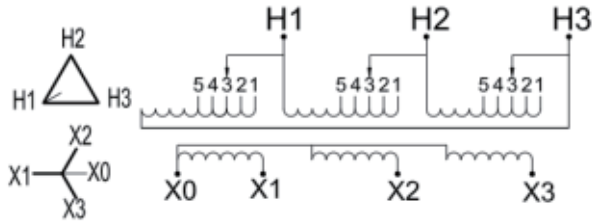

CONNECTIONS

% Voltage	Primary Volts	Connect lines to	Inter-connect
105.0%	504	H1,H2,H3	1
102.5%	492	H1,H2,H3	2
100.0%	480	H1,H2,H3	3
97.5%	468	H1,H2,H3	4
95.0%	456	H1,H2,H3	5

Secondary Volts	Connect lines to
208	X1,X2,X3
120	X1,X0 X2,X0 X3,X0

(W9)WIRING DIAGRAM

SCHEMATIC

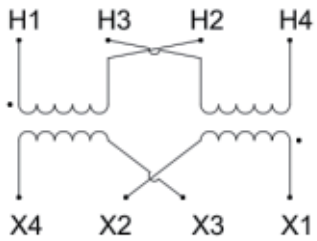

CONNECTIONS

% Voltage	Primary Volts	Connect lines to	Inter-connect
100.0%	480	H1,H4	H2-H3
100.0%	240	H1,H4	H1-H3, H2-H4

Secondary Volts	Connect lines to	Inter-connect
240	X1,X4	X2-X3
120	X1,X4	X2-X4,X1-X3
120/240	X1,X2,X4	X2-X3

(W10)WIRING DIAGRAM

SCHEMATIC

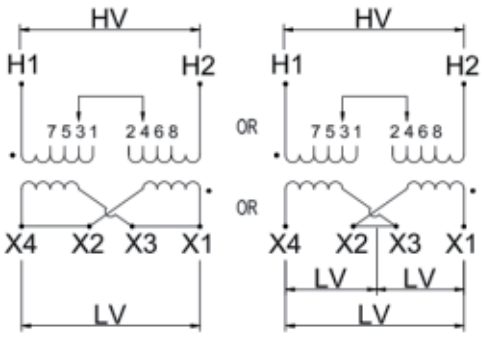

CONNECTIONS

% Voltage	Primary Volts	Connect lines to	Inter-connect
105.0%	504	H1,H2	1-2
102.5%	492	H1,H2	2-3
100.0%	480	H1,H2	3-4
97.5%	468	H1,H2	4-5
95.0%	456	H1,H2	5-6
92.5%	444	H1,H2	6-7
90.0%	432	H1,H2	7-8
105.0%	252	H1,H2	H1-2,H2-1
100.0%	240	H1,H2	H1-4,H2-3
95.0%	228	H1,H2	H1-6,H2-5
90.0%	216	H1,H2	H1-8,H2-7

Secondary Volts	Connect lines to	Inter-connect
240	X1,X4	X2-X3
120	X1,X4	X2-X4,X1-X3
120/240	X1,X2,X4	X2-X3