NOTES: UNLESS OTHERWISE SPECIFIED

1. INTERPRET DRAWING PER MIL-STD-100.
2. INTERPRET DIMENSIONS AND TOLERANCES PER ANSI Y14.5M.
3. DIMENSIONS AND VALUES IN BRACKETS ARE METRIC.
4. ABBREVIATIONS PER MIL-STD-12.
5. HEIGHT DIMENSIONS DO NOT REFLECT INSTALLED, LEVELED HEIGHT.

A70W

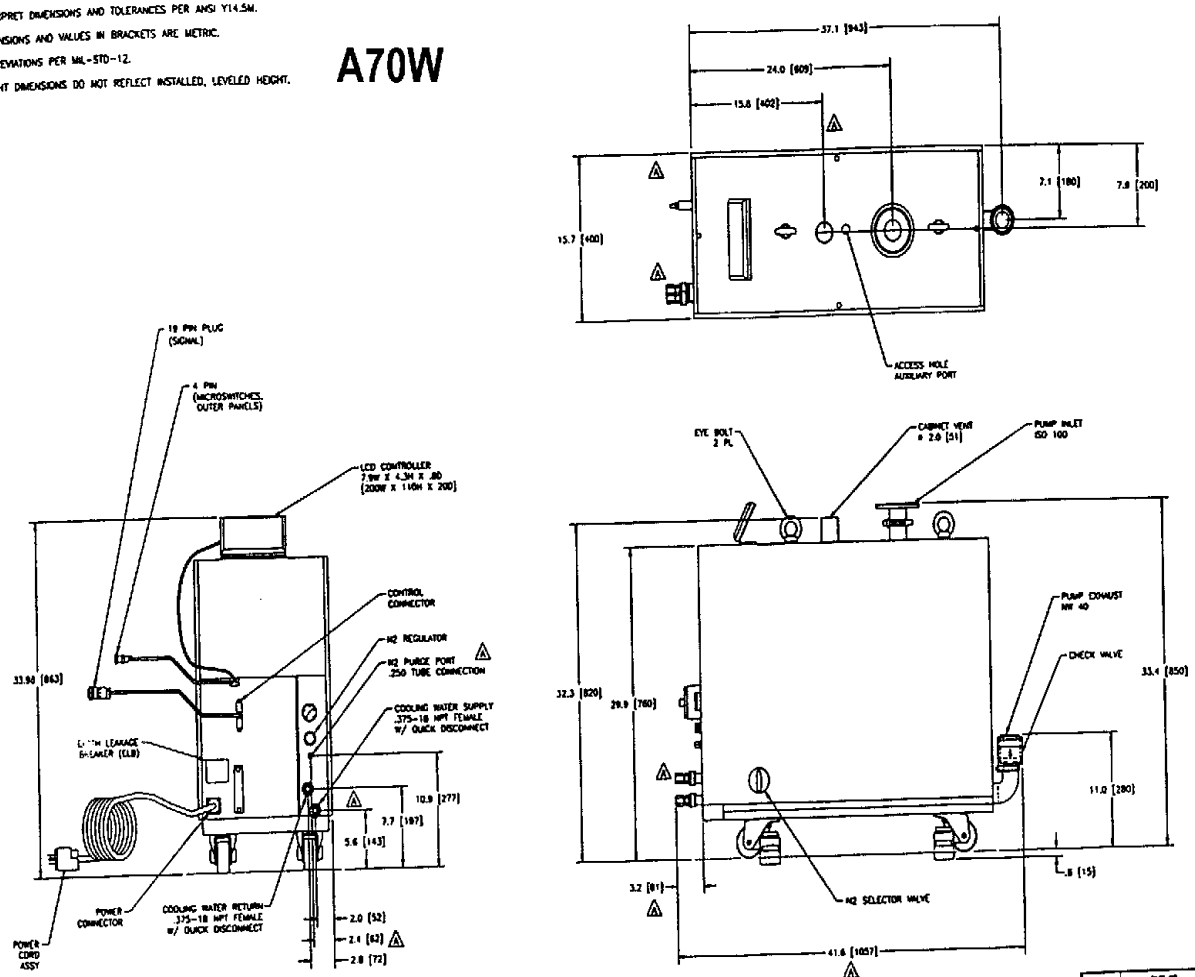

REVISIONS				
ZONE	LTR	DESCRIPTION	DATE	APPROVED
	A	SEE DCN-1687	3-1-96	SY/MK

EBARA TECHNOLOGIES INC.
DRYPUMP OPERATION

JOB NUMBER	171290
DRAWN	T.JONER
CHECK	S.KELLEY
DESIGN	T.JONER
PROJECT	S.KELLEY

EBARA TECHNOLOGIES INCORPORATED
DRYPUMP OPERATION
Sacramento, CA 95830, U.S.A.

B 110513 A

200798 200798

369