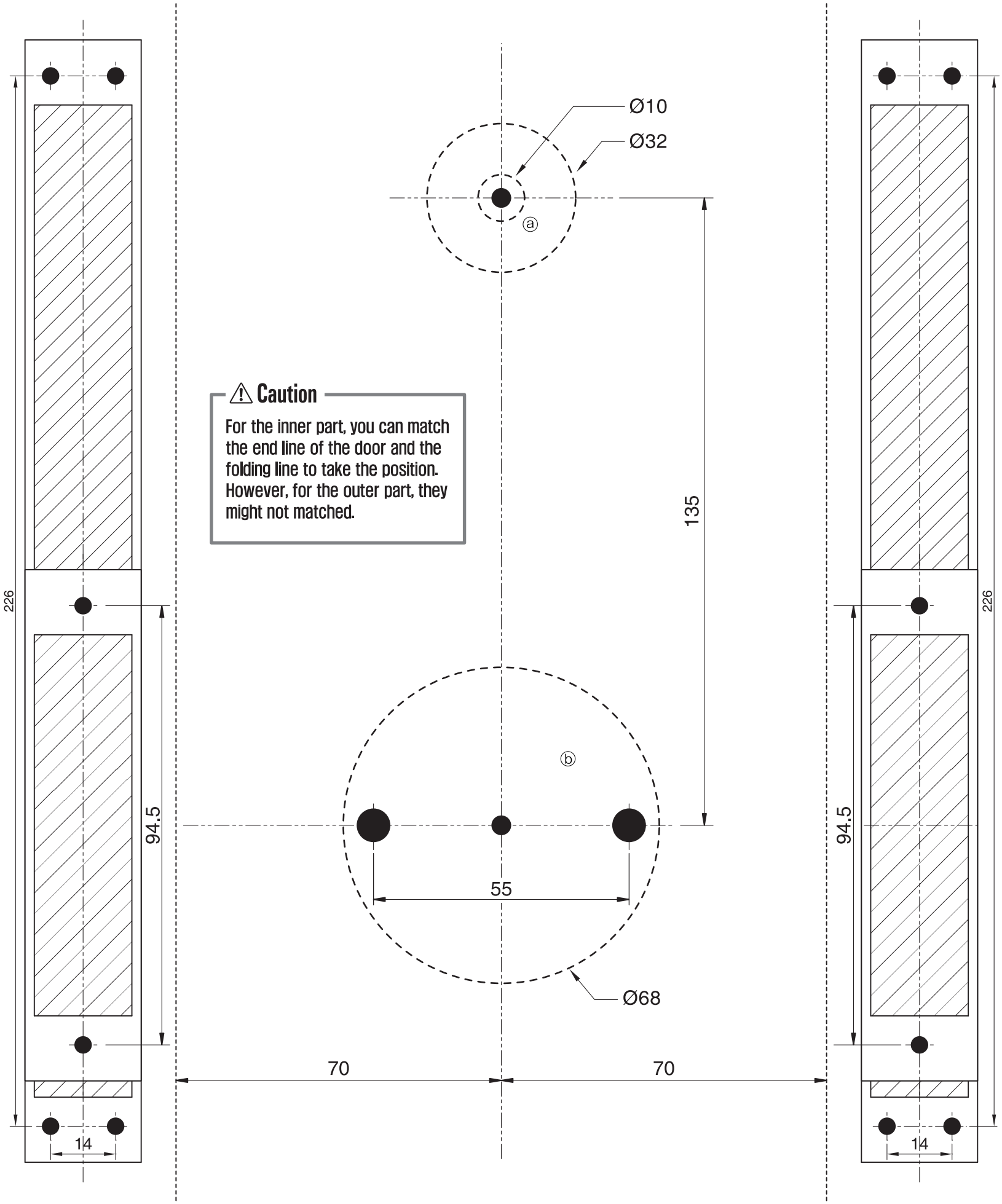


**⚠ Caution**

For the inner part, you can match the end line of the door and the folding line to take the position. However, for the outer part, they might not matched.
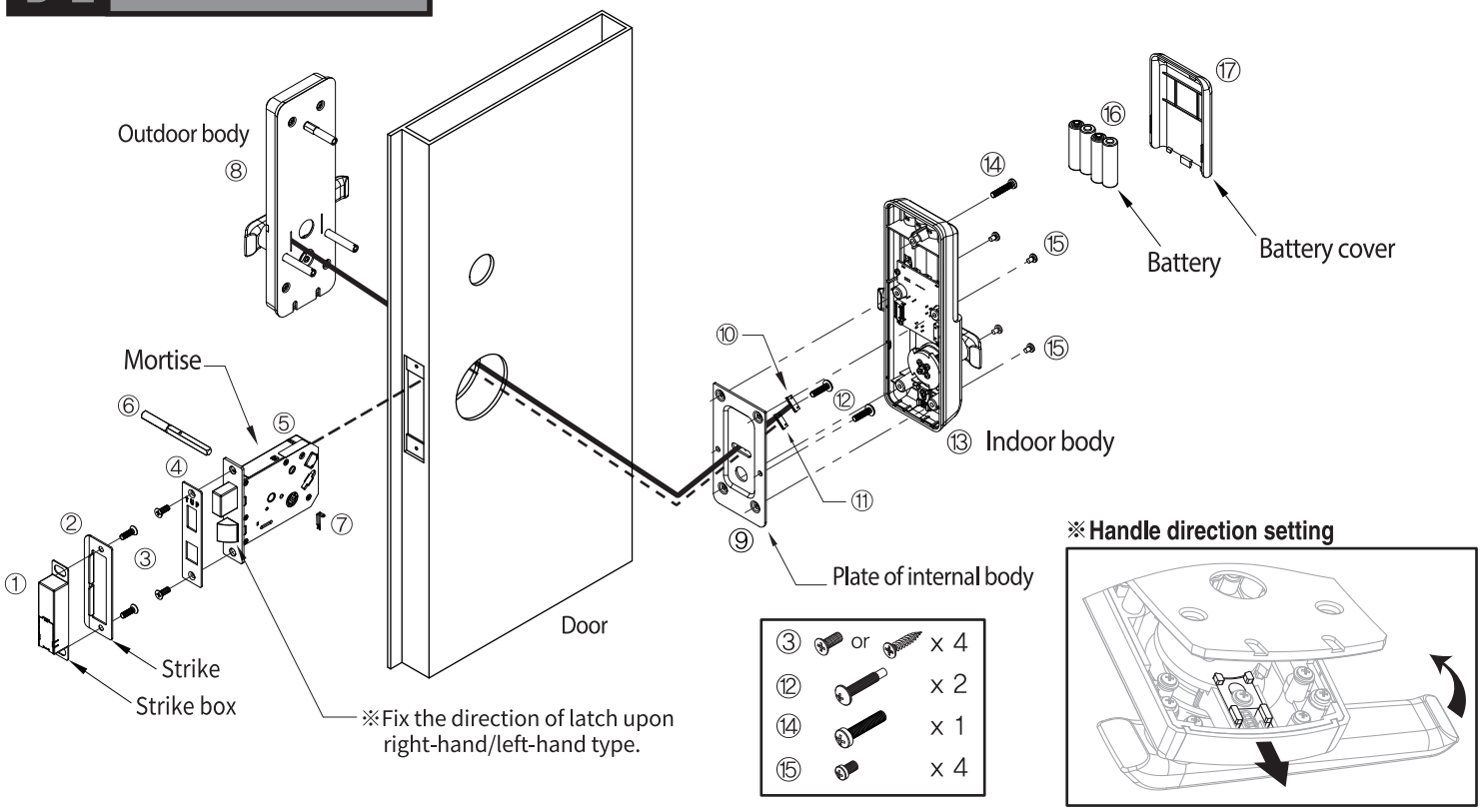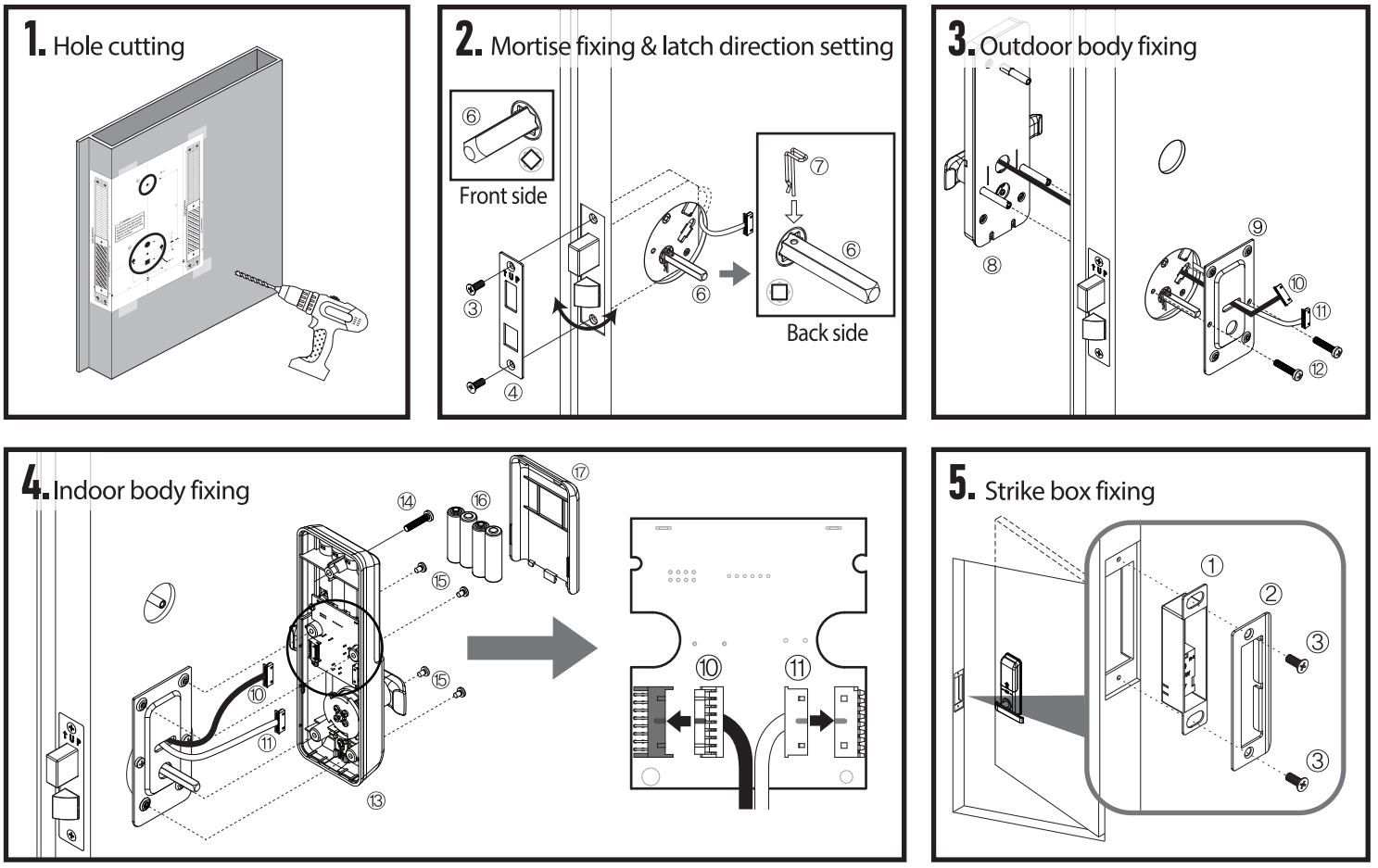
# B-2 Installation order