58 Wakis Avenue, Strijdompark, Randburg 2155, Johannesburg
Tel: +27 11 791 1033 | Fax: +27 11 791 1187 | wireless@otto.co.za | www.otto.co.za

SMA-02-76RP-L-TGG SMA R/P bulkhead crimp jack for RG174 with O ring

REV	DESCRIPTION	DRAWN	DATE

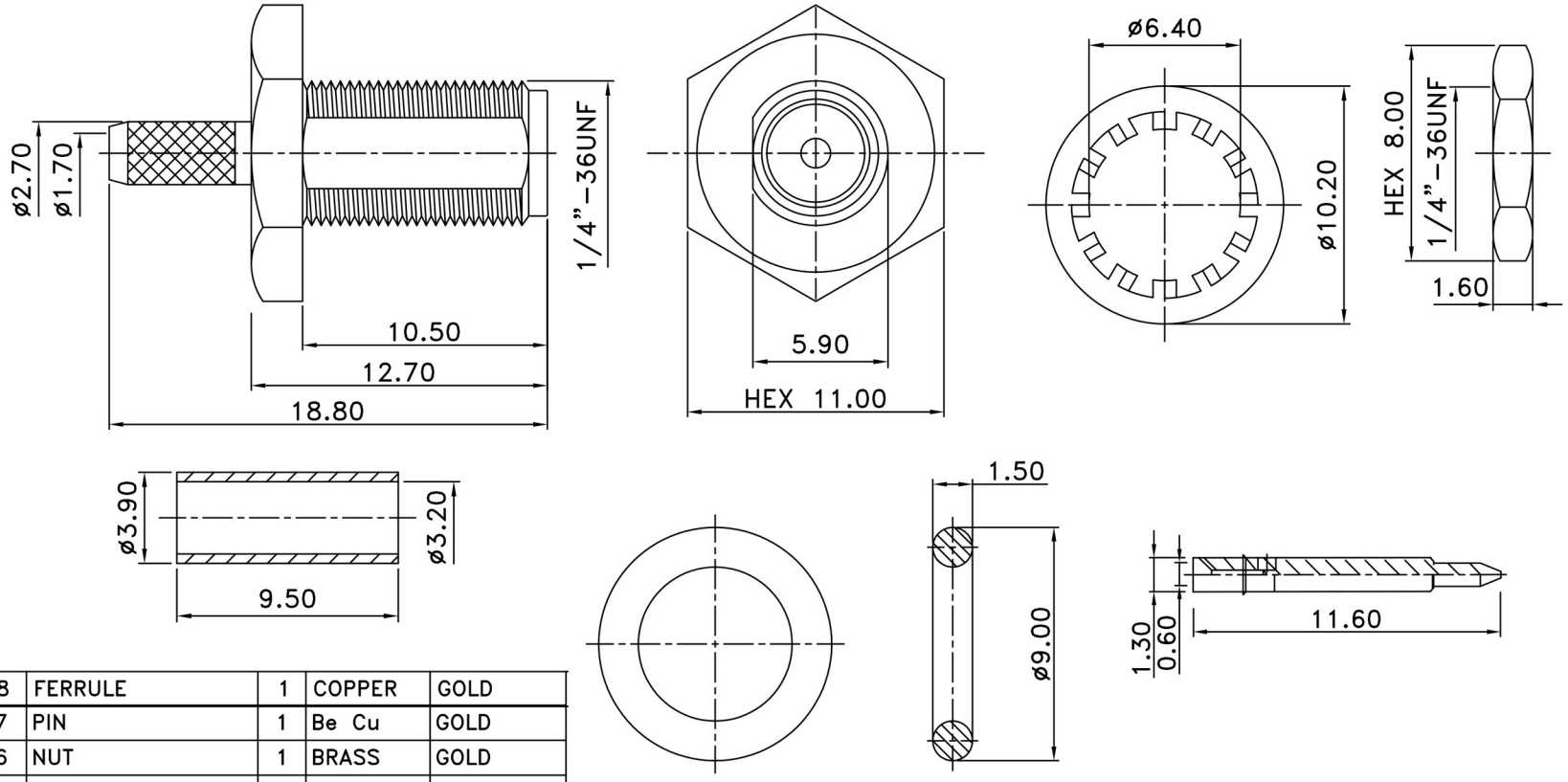

NO	Description	Q'ty	Material	Finish
8	FERRULE	1	COPPER	GOLD
7	PIN	1	Be Cu	GOLD
6	NUT	1	BRASS	GOLD
5	WASHER	1	BRASS	GOLD
4	O–RING	1	SILICON	NONE
3	WASHER	1	BRASS	GOLD
2	INSULATOR	1	TEFLON	NONE
1	BODY	1	BRASS	GOLD

UNLESS OTHERWISE SPECIFIED
1. REMOVE ALL BURRS.
2. BREAK ALL CONNERS & EDGES C0.15 MAX.
3. CHAMFER 1ST & LAST THREADS 45°.
4. DIAMETERS ON COMMON CENTERS. TO BE CONCENTRIC WITHIN 0.1 T.I.R.
5. ALL DIMENSIONS ARE AFTER PLATING.

* MAJOR DIMENSION
UNLESS OTHERWISE NOTED TOLERANCES
0.5–6=±0.2
6–30=±0.4
30–120=±0.6
120–315=±1.0
ANGLES=±1°

SCALE 4/1 | UNIT MM

APPROVED
CHECKED
DRAWN andrew
DRAWN DATE 03/06/05

CHANGHONG
CHANG HONG TECHNOLOGY CO., LTD.

TITLE
SMA FEMALE RP BKD CRIMP FOR RG174(O–RING)

DRAWING NO. SMA–02–76–RP–L–TGG
REV A

FILE NO.