58 Wakis Avenue, Strijdompark, Randburg 2155, Johannesburg
Tel: +27 11 791 1033 | Fax: +27 11 791 1187 | wireless@otto.co.za | www.otto.co.za

MCX-05-10-M-TGG MCX plug right angle crimp for RG178

REV	DESCRIPTION	DRAWN	DATE

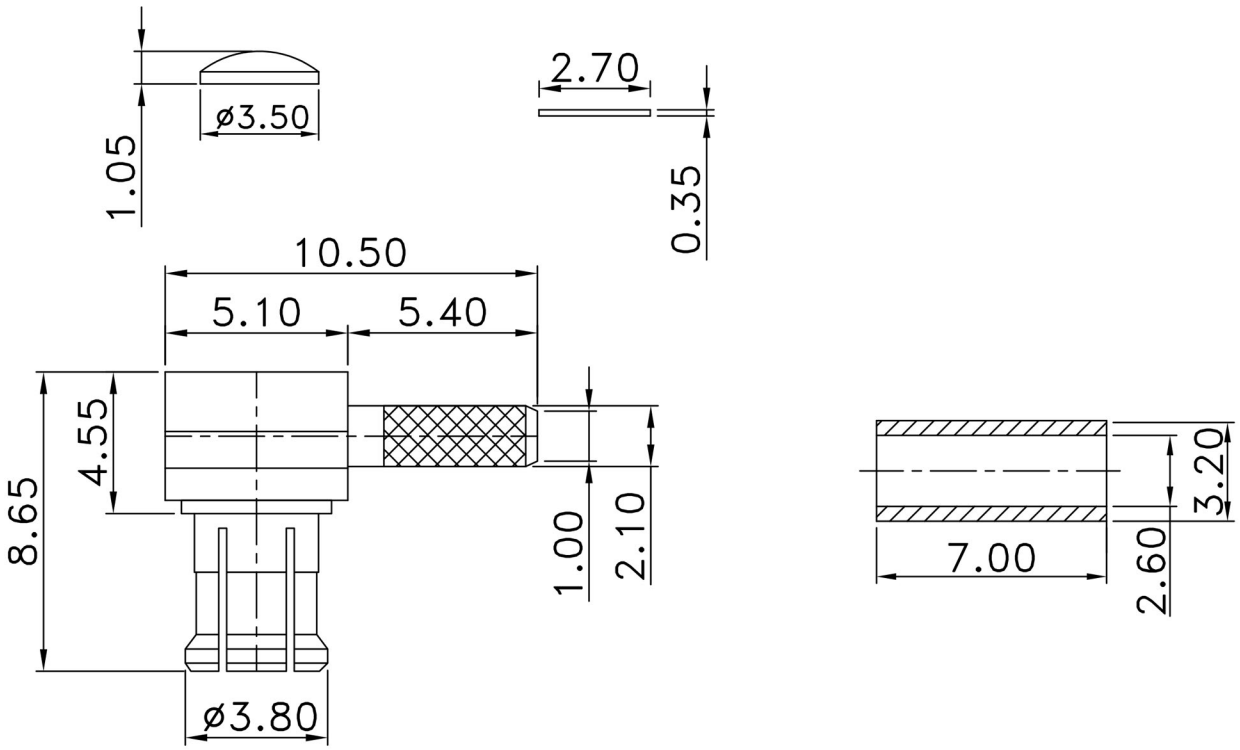

NO	Description	Q'ty	Material	Finish
6	CAP	1	BRASS	GOLD
5	FERRULE	1	BRASS	GOLD
4	DIELECTRIC	1	TEFLON	NONE
3	PIN	1	PHOS BRONZE	GOLD
2	BODY	1	BERYLLIUM	GOLD
1	BODY	1	BRASS	GOLD

UNLESS OTHERWISE SPECIFIED
1. REMOVE ALL BURRS.
2. BREAK ALL CONNERS & EDGES C0.15 MAX.
3. CHAMFER 1ST & LAST THREADS 45°.
4. DIAMETERS ON COMMON CENTERS. TO BE CONCENTRIC WITHIN 0.1 T.I.R.
5. ALL DIMENSIONS ARE AFTER PLATING.

* MAJOR DIMENSION
UNLESS OTHERWISE NOTED TOLERANCES
0.5–6=±0.2
6–30=±0.4
30–120=±0.6
120–315=±1.0
ANGLES=±1°

SCALE 6/1 | UNIT MM

APPROVED
CHECKED
DRAWN andrew
DRAWN DATE 03/07/29

CHANGHONG
CHANG HONG TECHNOLOGY CO., LTD.

TITLE MCX MALE R/A CRIMP FOR RG178
DRAWING NO. MCX–05–10–M–TGG
REV A
FILE NO.