58 Wakis Avenue, Strijdompark, Randburg 2155, Johannesburg
Tel: +27 11 791 1033 | Fax: +27 11 791 1187 | wireless@otto.co.za | www.otto.co.za

FAKRA-DF-01 FAKRA GSM plug (purple)

REV	DESCRIPTION	DRAWN	DATE

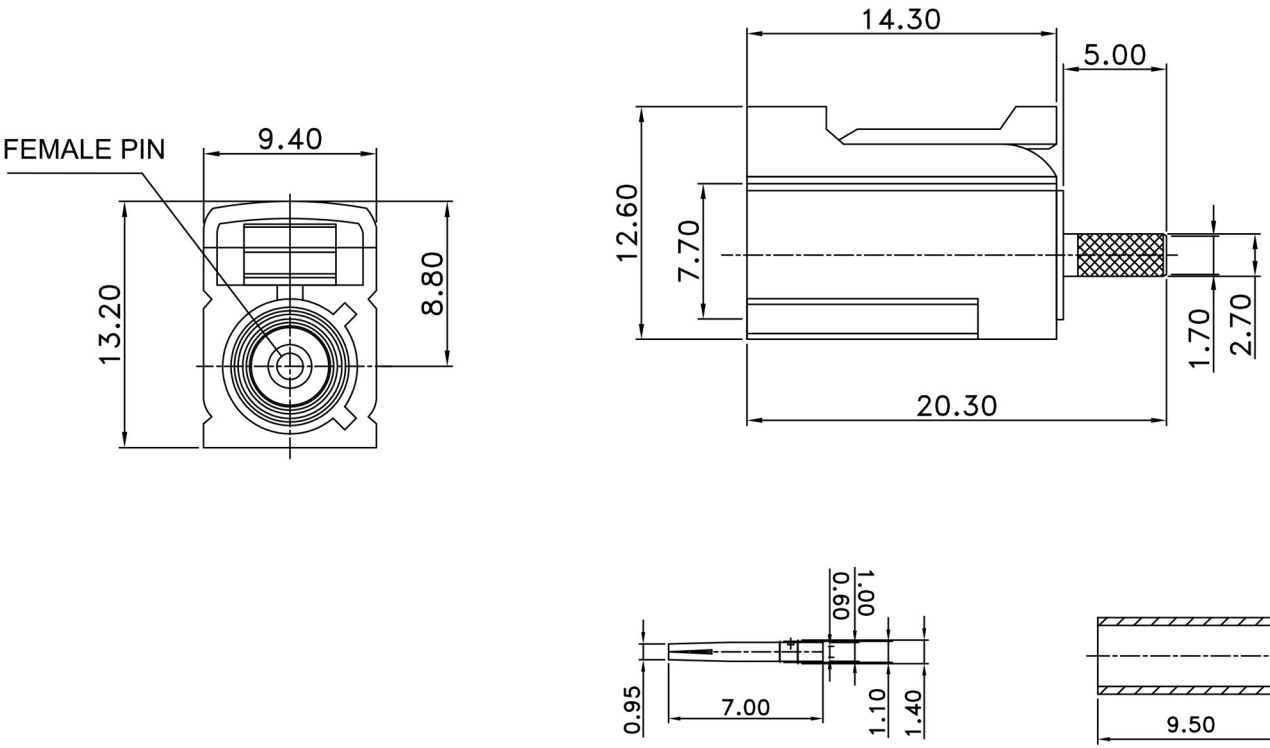

NO	Description	Q'ty	Material	Finish
6	FERRULE	1	COPPER	NICKEL
5	SHELL	1	PA66	Bordeaux
4	INSULATOR	1	PTFE	NONE
3	INSULATOR	1	PTFE	NONE
2	PIN	1	Be Cu	GOLD
1	BODY	1	COPPER	NICKEL

UNLESS OTHERWISE SPECIFIED
1. REMOVE ALL BURRS.
2. BREAK ALL CONNERS & EDGES C0.15 MAX.
3. CHAMFER 1ST & LAST THREADS 45°.
4. DIAMETERS ON COMMON CENTERS. TO BE CONCENTRIC WITHIN 0.1 T.I.R.
5. ALL DIMENSIONS ARE AFTER PLATING.

* MAJOR DIMENSION
UNLESS OTHERWISE NOTED TOLERANCES
0.5–6=±0.2
6–30=±0.4
30–120=±0.6
120–315=±1.0
ANGLES=±1°

SCALE 5/2 | UNIT MM

APPROVED
CHECKED
DRAWN andrew
DRAWN DATE 03/06/20

CHANGHONG
CHANG HONG TECHNOLOGY CO., LTD.

TITLE FAKRA D TYPE JACK CRIMP FOR RG174
DRAWING NO. FAKRA–DF–01
REV A
FILE NO.