Bicycle Holder

Instruction Sheet

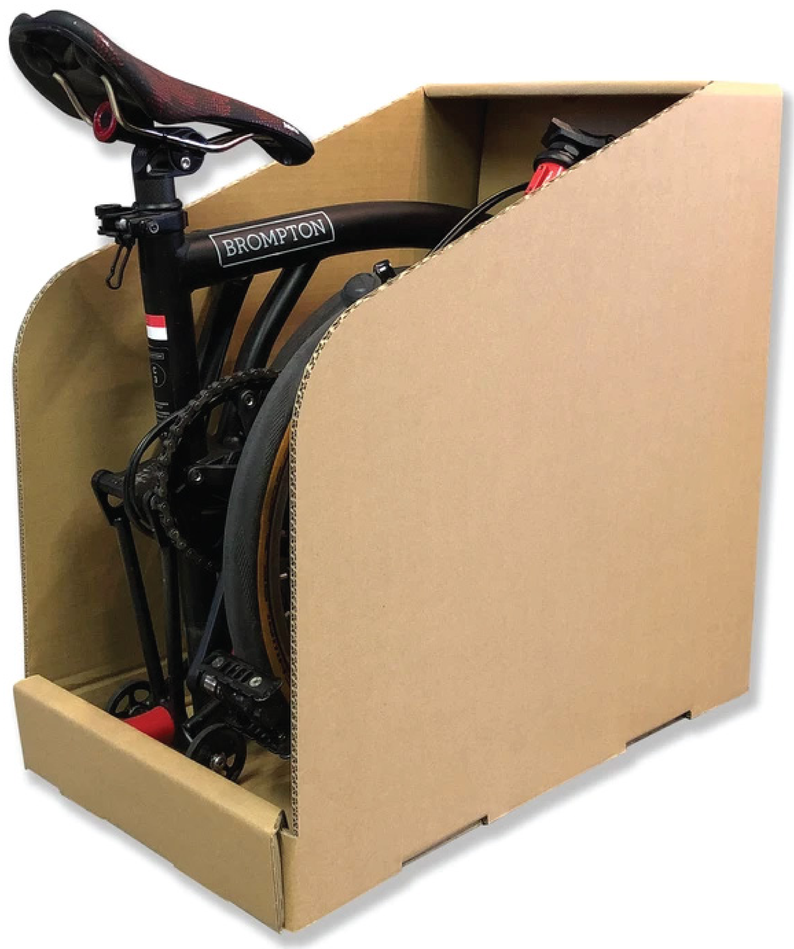

Paper Carpenter®

1

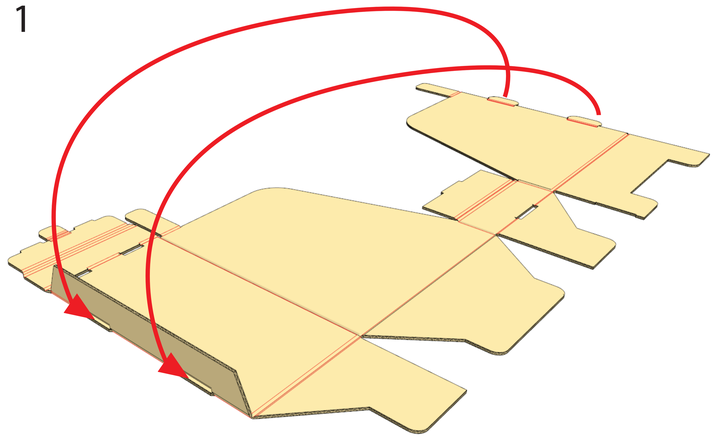

2

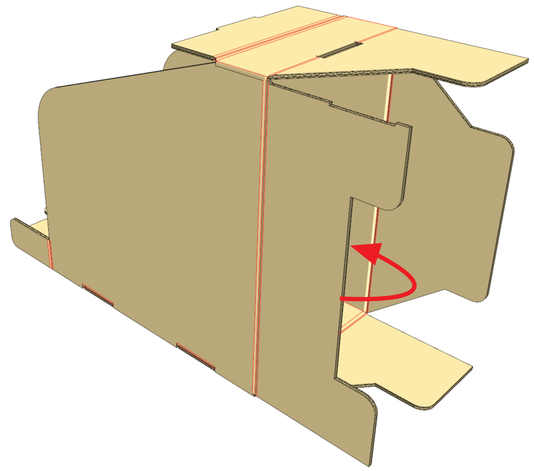

3

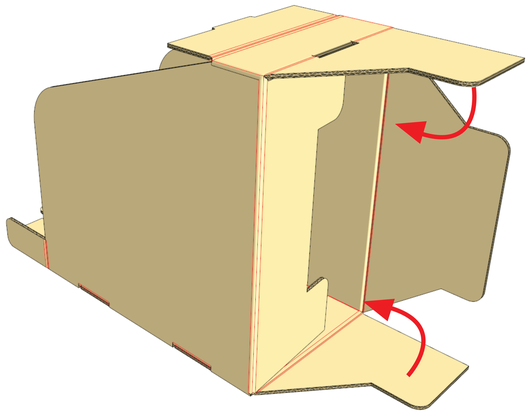

4

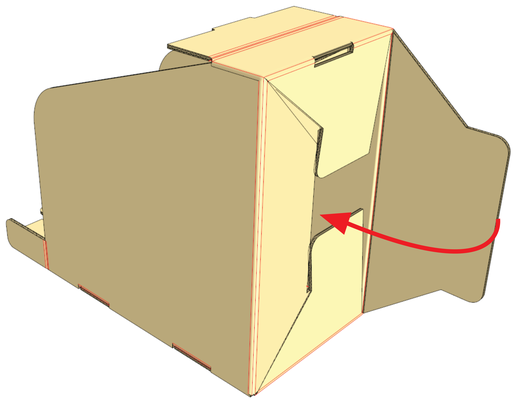

5

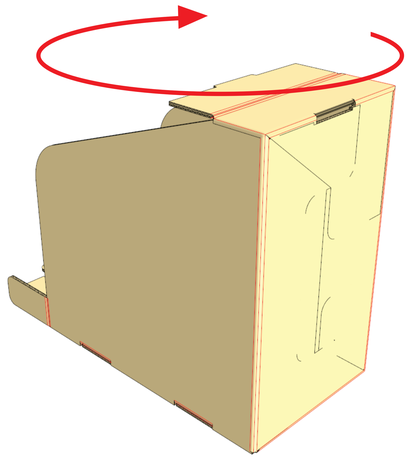

6

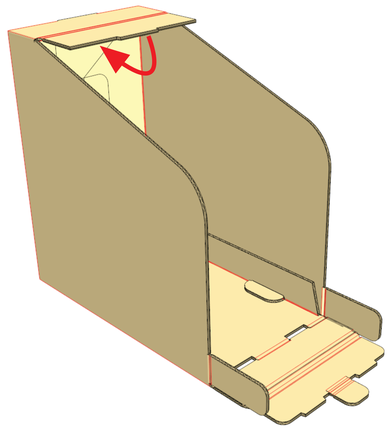

7

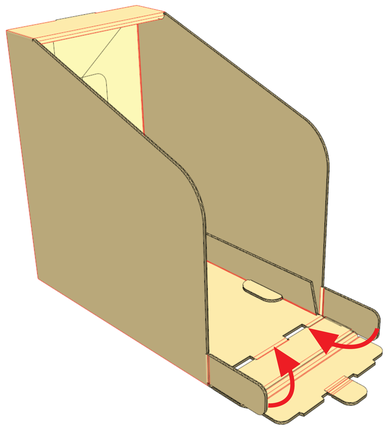

8

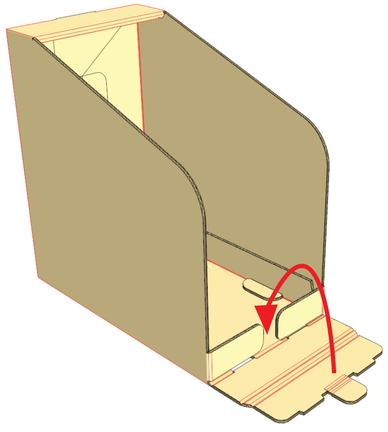

9

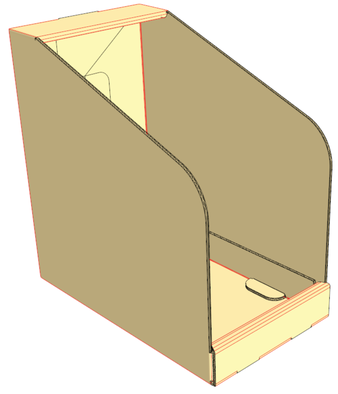

Paper Carpenter®